BuildMath

Stairs - Concealed stringer

One worked example, with the maths behind each result - follow it in the app and check it by hand.

© Robert Butwell 2026

Stringer Types

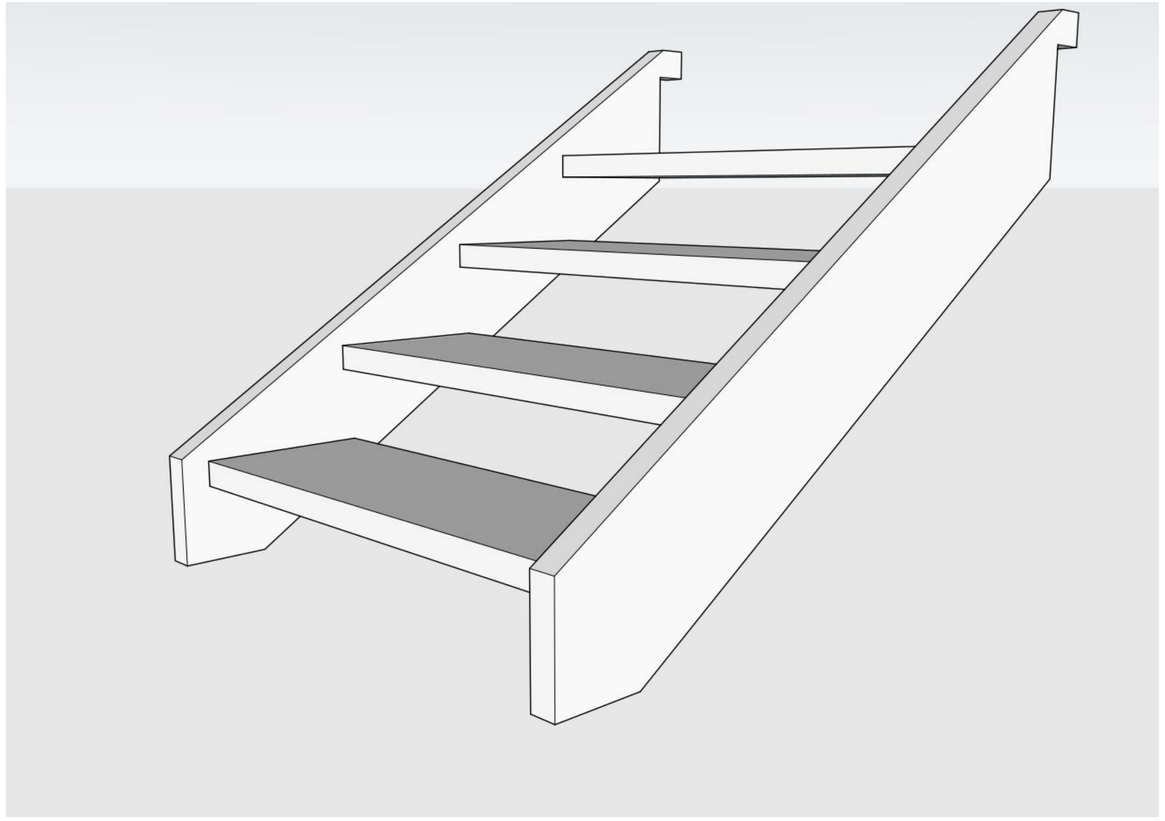

Exposed Stringer

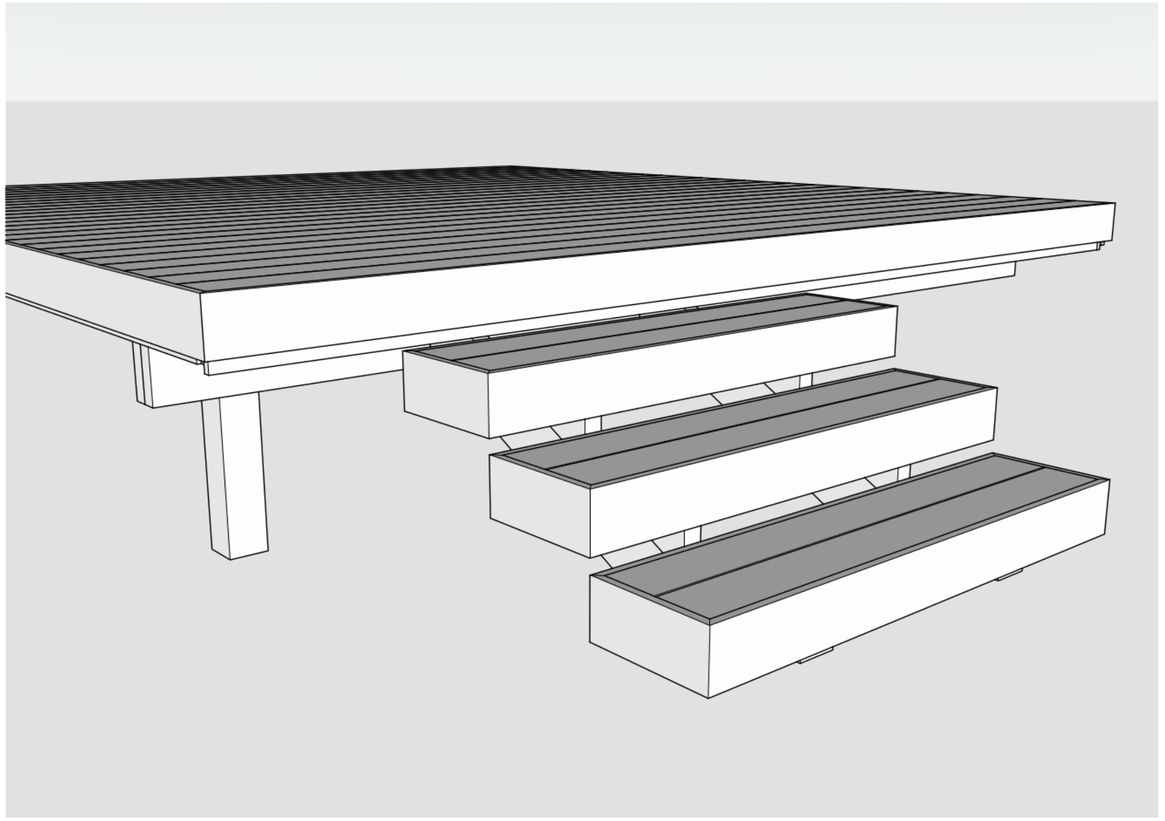

Concealed Stringer

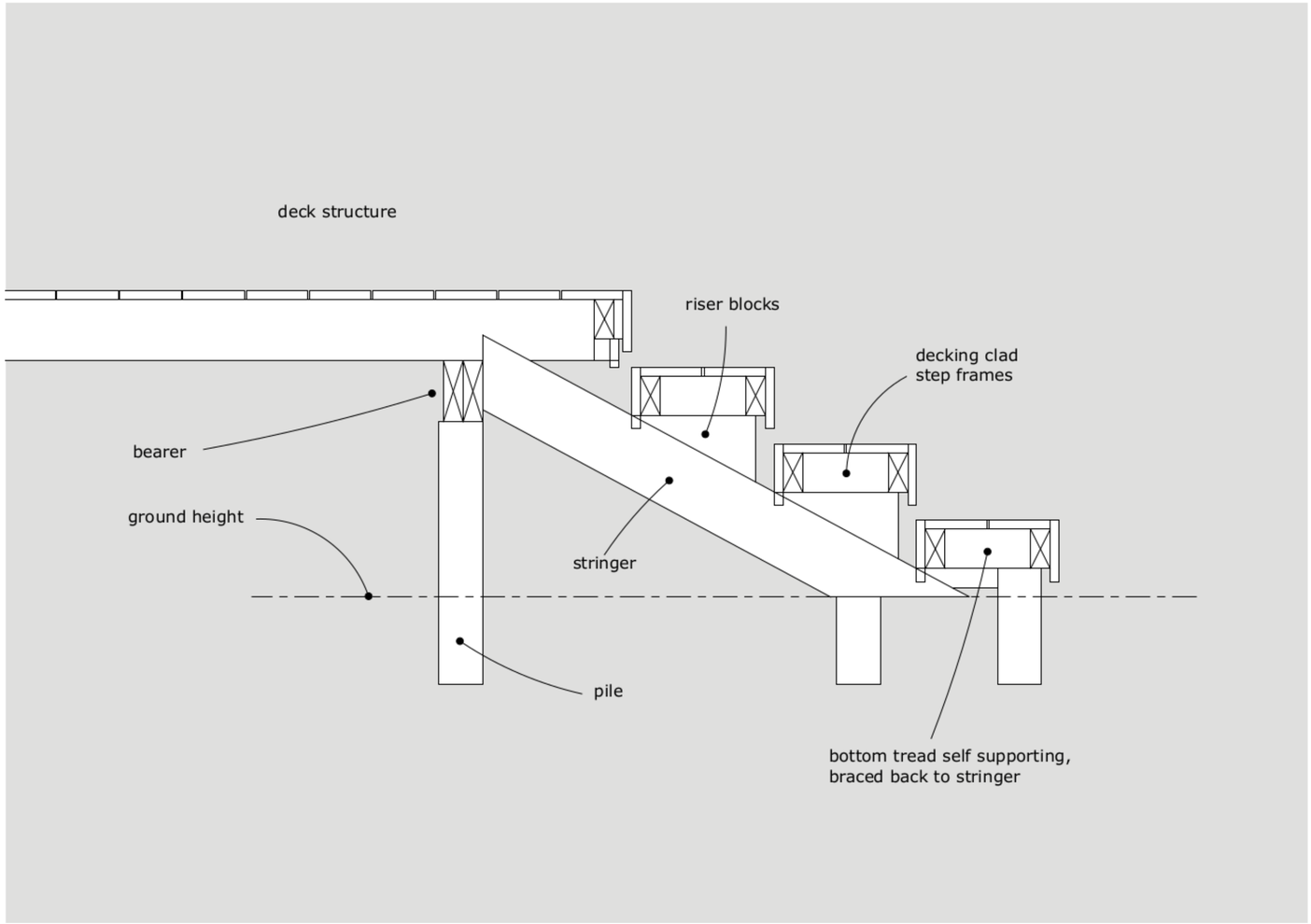

Stairs - Concealed stringer gives the rise, angles, fixing position and a full stringer markout for a stair with the stringers hidden under the treads.

Triangular blocks fixed to the stringer carry decking-clad step frames. The frames overhang the stringer at the ends and front, so it can't be seen.
The top of the stringer runs into the deck structure and fixes to the bearer or to a fixing you put in.
The bottom tread is usually self-supporting, braced back to the stringer above ground.

Number of rises = height ÷ target rise, rounded up
Rise = height ÷ number of rises
Tread block spacing = tread width ÷ cos(angle), measured along the stringer

Note:
For treads between the stringers use Stairs - Exposed stringer.

Inputs



Enter the values

Height	700 - top of decking to ground or platform.
Target Rise	180
Tread Width	325 - front face to back face, no nosing.
Tread Thickness	110 - framing plus decking, no facing hang down.
Stringer Width	150 - square to the edge.
Decking thickness	20
Block set back	40 - block back from the face of the tread.

The next page shows where each one is measured.

The stringer fixing is set below these - see Stringer fixing.

Entering values, saving configs and projects: see Build Math - the basics.

Inputs Drawing

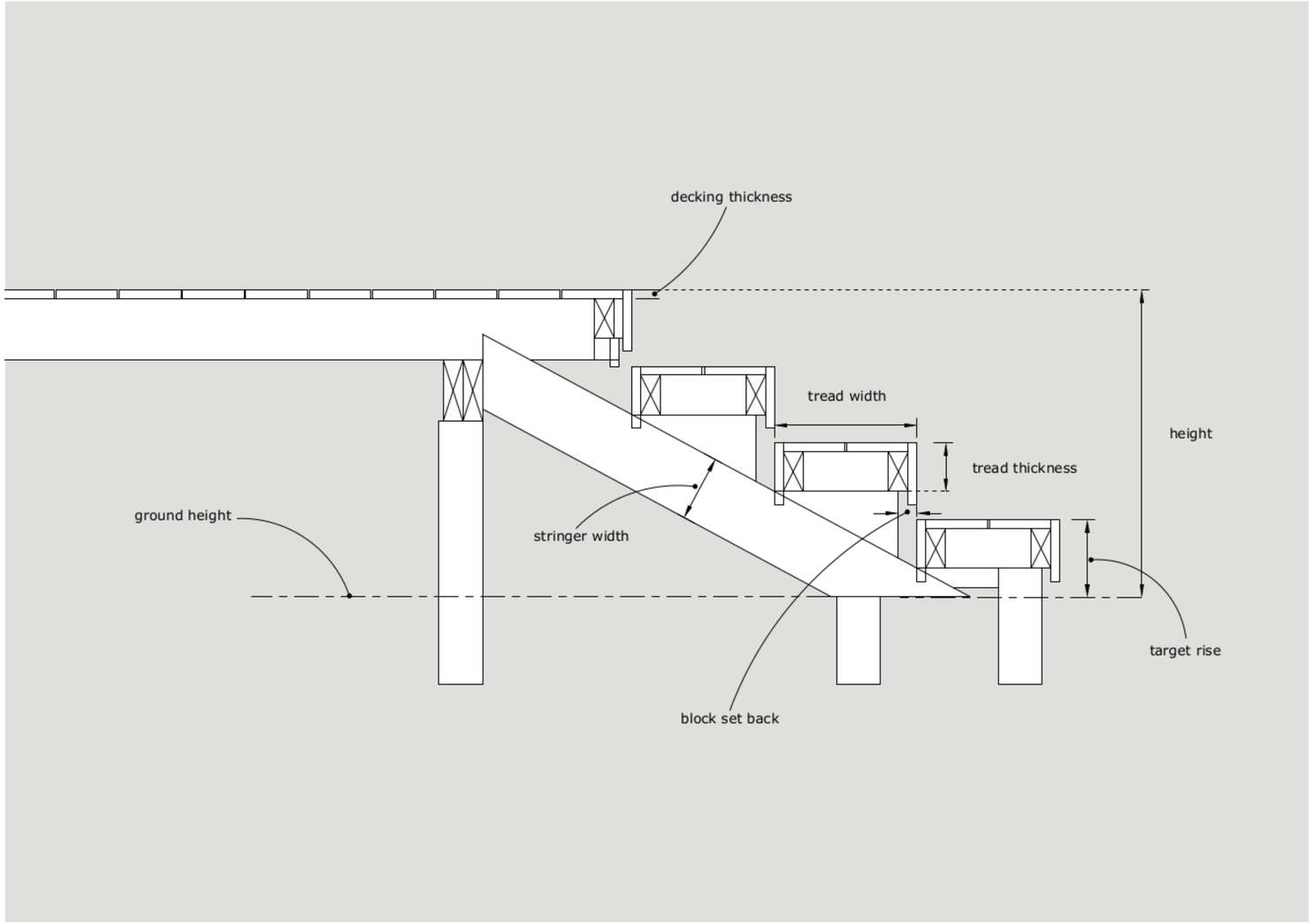

Tread Width is the full tread. The front face of each tread lines up with the back face of the tread below.

Stringer Fixing

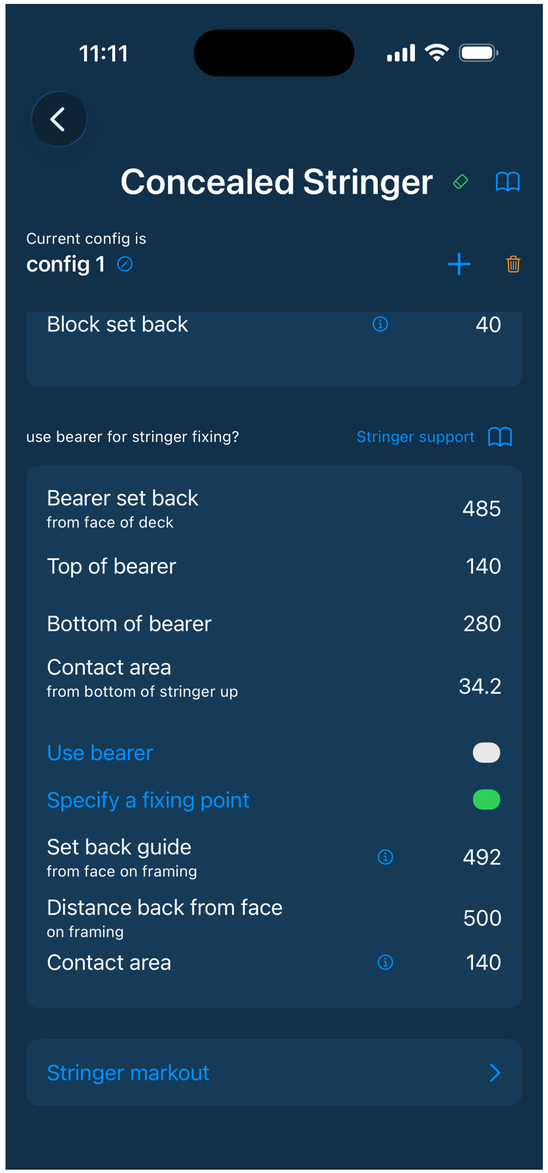

The top of the stringer fixes to the deck bearer if there's enough contact. If not, specify a fixing point.

Bearer

Bearer set back	485 - deck face to the face of the bearer.
Top of bearer	140 - down from top of deck framing.
Bottom of bearer	280 - down from top of deck framing.

Contact area	from bottom of stringer up 34.2
Top of stringer at the bearer	175 + 110 – 20 – 485 × 175 ÷ 325 = 265 – 261.2 = 3.8
Bottom of stringer at the bearer	3.8 + 150 × 369.1 ÷ 325 = 3.8 + 170.4 = 174.2
Contact	174.2 – 140 = 34.2 - only the bottom of the stringer reaches the bearer.

34 isn't enough to fix to, so choose Specify a fixing point.
(With the bearer at 340 for example, the contact is 112 and Use bearer works.)

The Set back guide is the amount of set back where the top of the stringer is level with the framing.
Use it as a reference to pick a fixing point.

Set back guide	265 ÷ (175 ÷ 325) = 492

Distance back from face	500
Contact area	140 - the full depth of the fixing.

Use the info button by Contact area to see the type of contact.

The stringer passes the bearer on its way to the fixing, so it needs a notch - see Set out info.

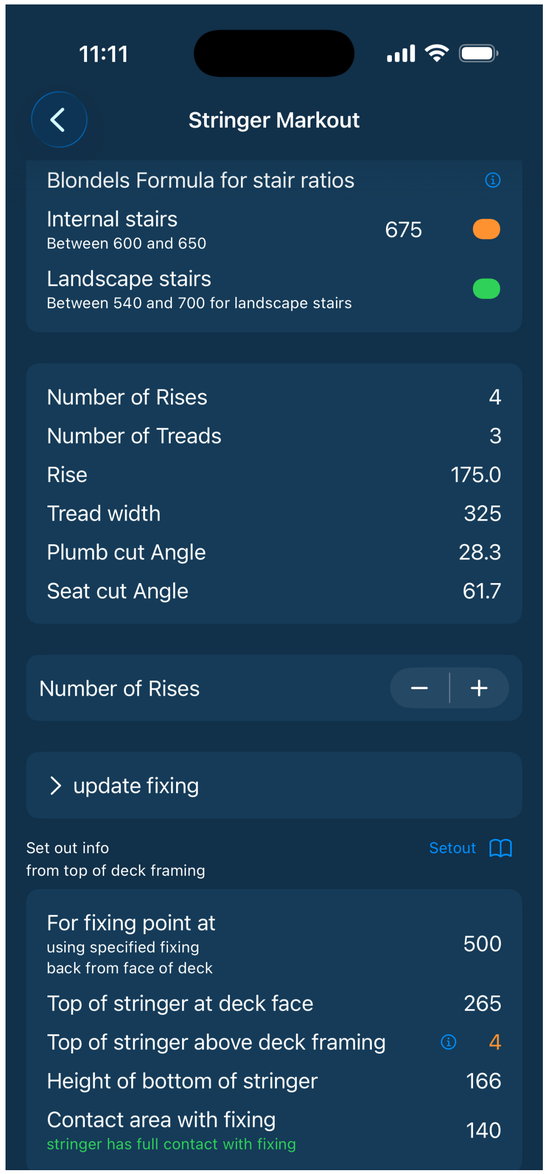

Results

Number of Rises	700 ÷ 180 = 3.9, rounded up to 4
Rise	700 ÷ 4 = 175.0
Number of Treads	4 – 1 = 3
Tread width	325 - as entered. With no nosing it's also the going.
Plumb cut Angle	$\tan^{-1}(175 \div 325) = 28.3°$
Seat cut Angle	90 – 28.3 = 61.7°

Blondels Formula

2 × 175 + 325 = 675 - over 650 for internal stairs (orange), inside 540 to 700 for landscape stairs (green).

For landscape stairs 675 works.

Change the number of rises with + and – and everything recalculates.

Set out info - from top of deck framing

For fixing point at 500 - using specified fixing.

Top of stringer at deck face	175 + 110 – 20 = 265 - rise + tread thickness – decking. The tip of the first block.
Top of stringer above framing	265 – 500 × 175 ÷ 325 = 265 – 269.2 = –4.2, shown as 4 - trim it off after marking out.
Height of bottom of stringer	–4.2 + 170.4 = 166
Contact area with fixing	140 - stringer has full contact with fixing.

Markout



Bearer markout

For bearer at	485
Notch height	from bottom of stringer up 34 - from the bearer check.
Position on stringer	485 × 369.1 ÷ 325 = 551 - from the markout start point, back into the deck.

To change the fixing use update fixing at the top of the screen.

Top length of stringer	(700 – 285) × 369.1 ÷ 175 + 500 × 369.1 ÷ 325 = 875.3 + 567.9 = 1443 Fixing point to the ground, plumb cut top, seat cut bottom.
Markout start point	500 × 369.1 ÷ 325 = 568 - the part inside the deck. Line it up with the deck facing.
Block length	325 – 40 = 285
Block height	285 × 175 ÷ 325 = 153

Tread block markout - down the stringer, the tip of each block

from markout point	369, 738 - 369.1 apart.
from top end of stringer	568, 937, 1306 - the same marks + 568.

The last block is short of the bottom of the stringer - the bottom tread is supported separately.

Mark out before trimming the top down to the framing - the marks are measured along the top edge.

The pages after this have more drawings of the fixing and markout, in the same order as the app screens.

Read the list out loud: see Build Math - the basics.

Bearer set back works

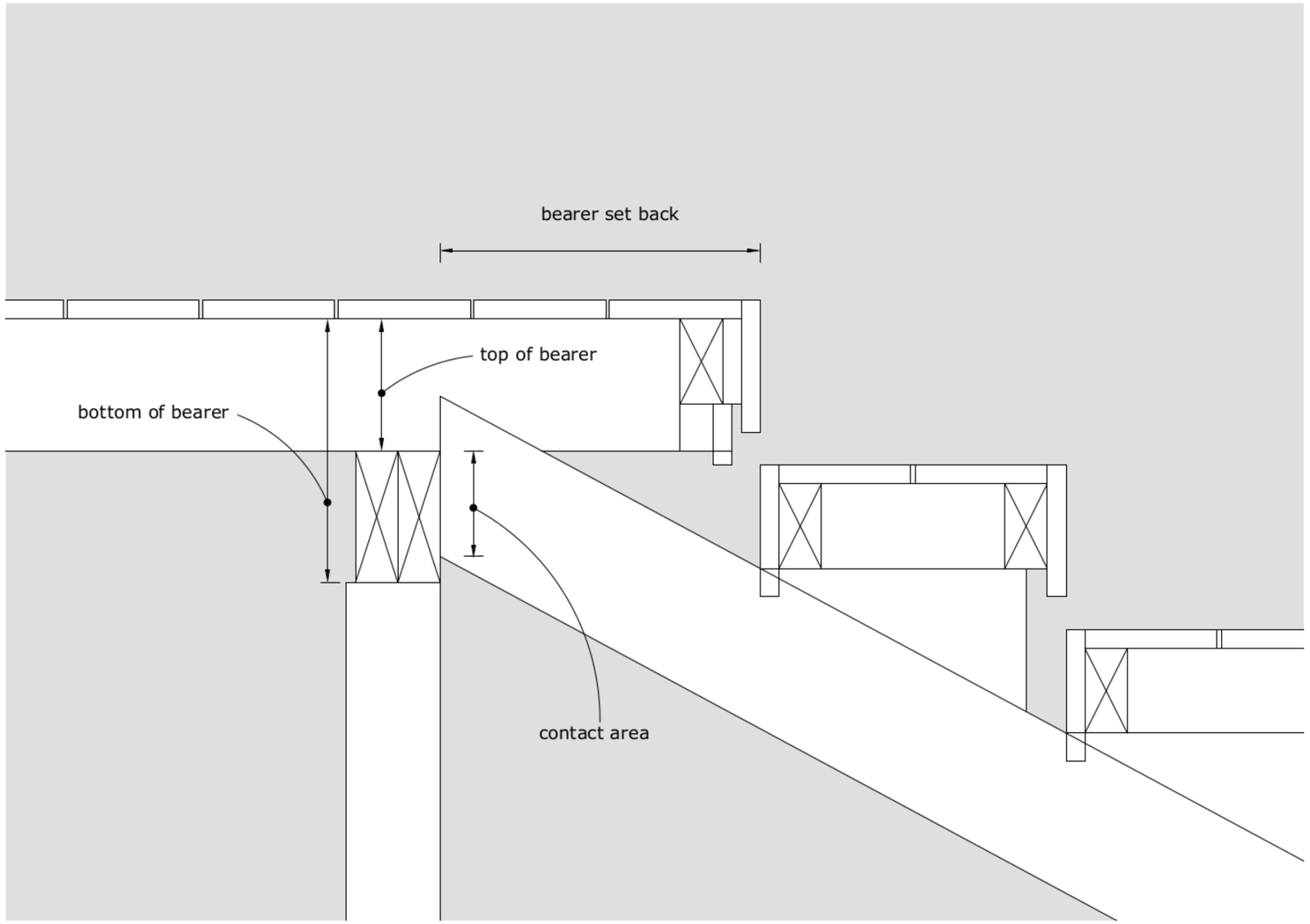

Bearer set back: from front face to face of bearer.

Top of bearer: from top of deck framing to top of bearer

Bottom of bearer: from top of deck framing to bottom of bearer

Contact area: how much of the stringer will have contact with the bearer.
Its orientation (from bottom or top of the stringer) is also shown.

In the example shown, this would likely be enough contact.

Specified set back

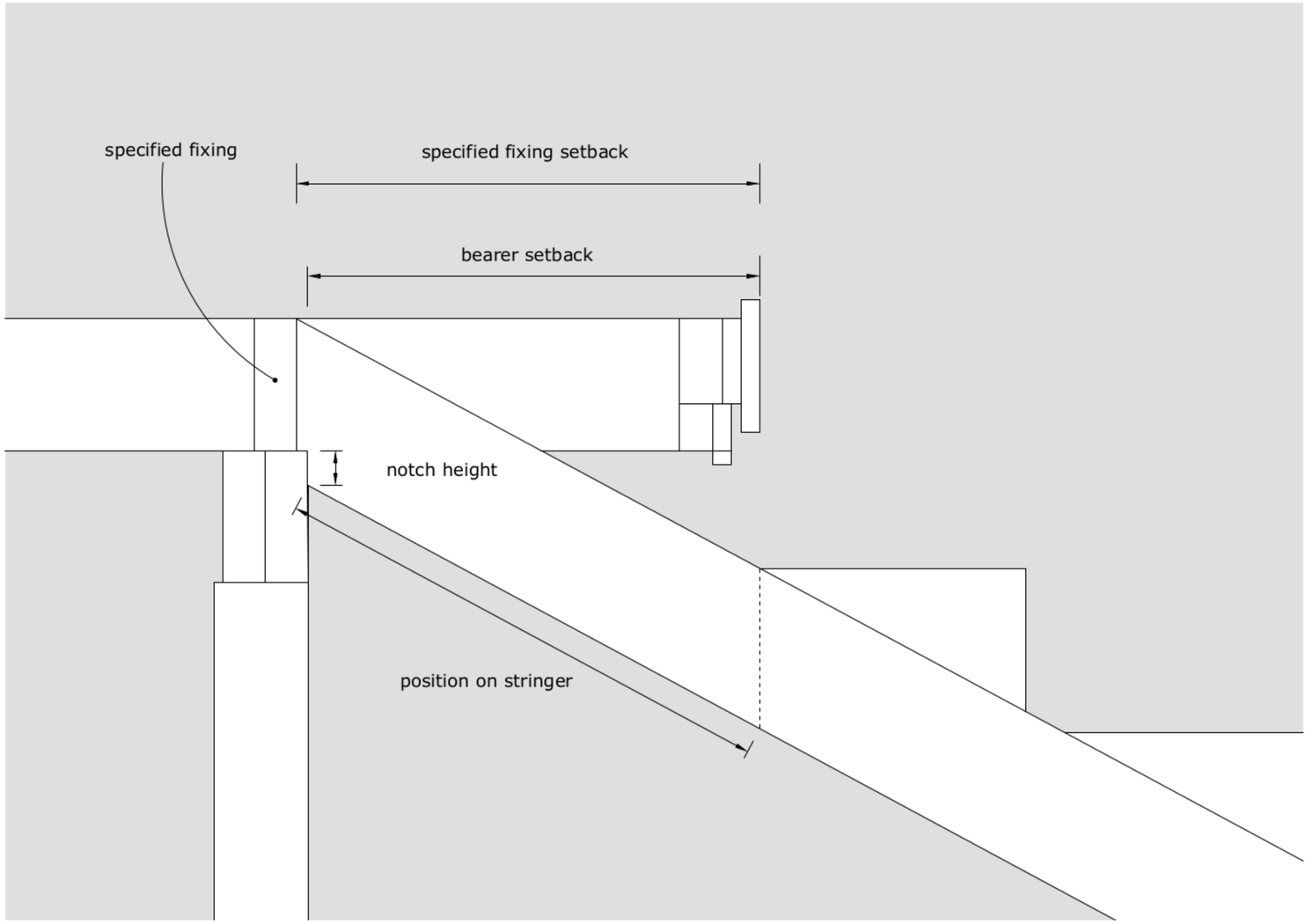

When using Specified fixing the bearer may still encounter the stringer. It will be necessary to notch the stringer so that it can extend to the Specified fixing you have set.

Notch height: the height of the notch required to clear the bearer, along with its orientation to the stringer.

Position on stringer: measured from the Markout start point (next page), back into the deck.

Stringer Markout

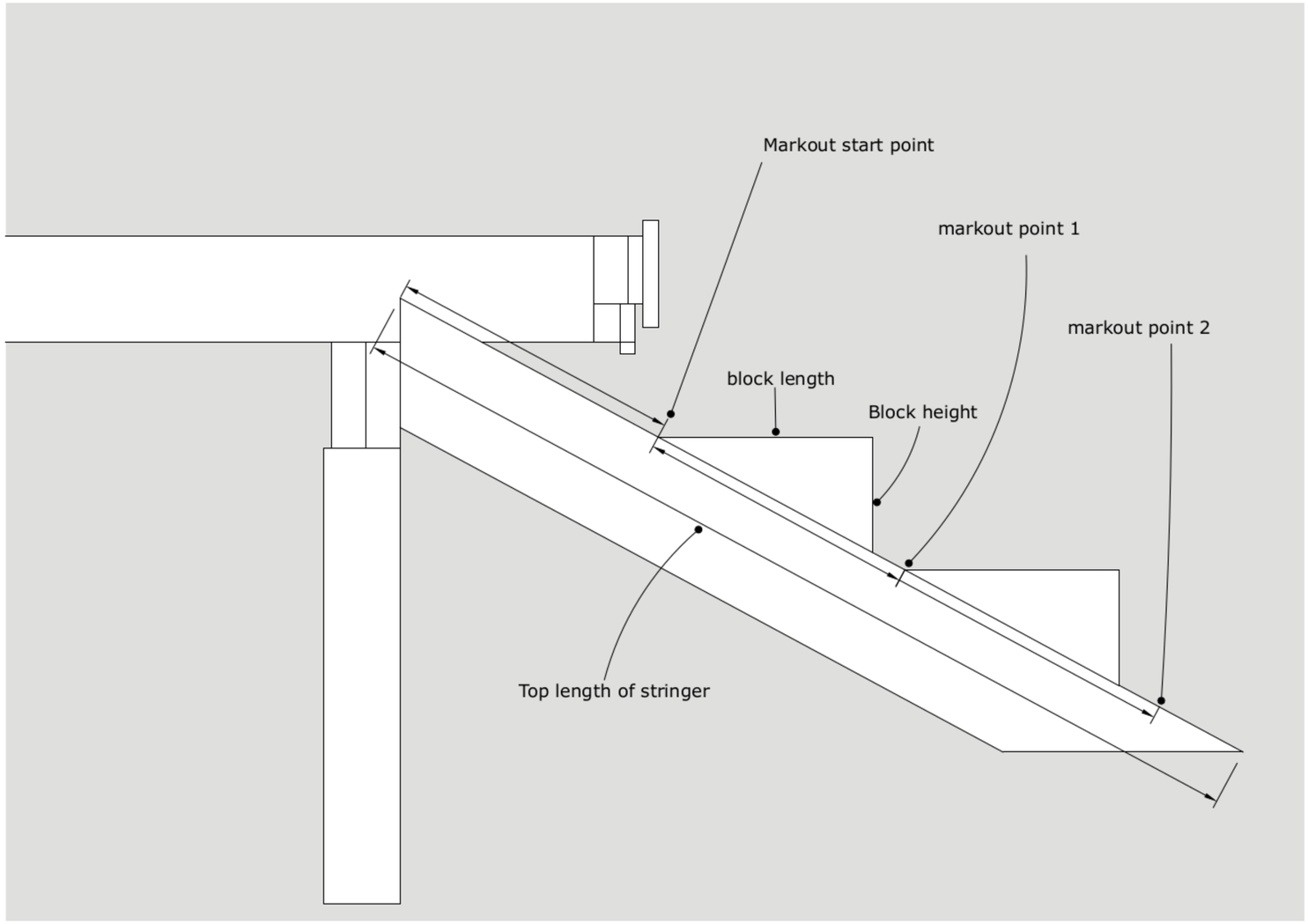

Top length of stringer:
The total length of the stringer along the top edge.
The top cut is a plumb cut.
The bottom cut is a seat cut.

Note: being that the stringer is set back in relation to the treads, it is normal that the bottom step will miss the end of the stringer and will need supporting in an alternative way.

Markout start point:
This is the portion of the stringer that extends into the deck structure onto the fixing point.
The mounting block for the top tread has its tip on this mark.

The back of the first tread also aligns on this mark.

If the facing on the steps hangs down below the step framing, (usually would) it will be necessary to notch the facing out over the stringer.

For the stair to work be sure this point lines up with the facing above.

Angles

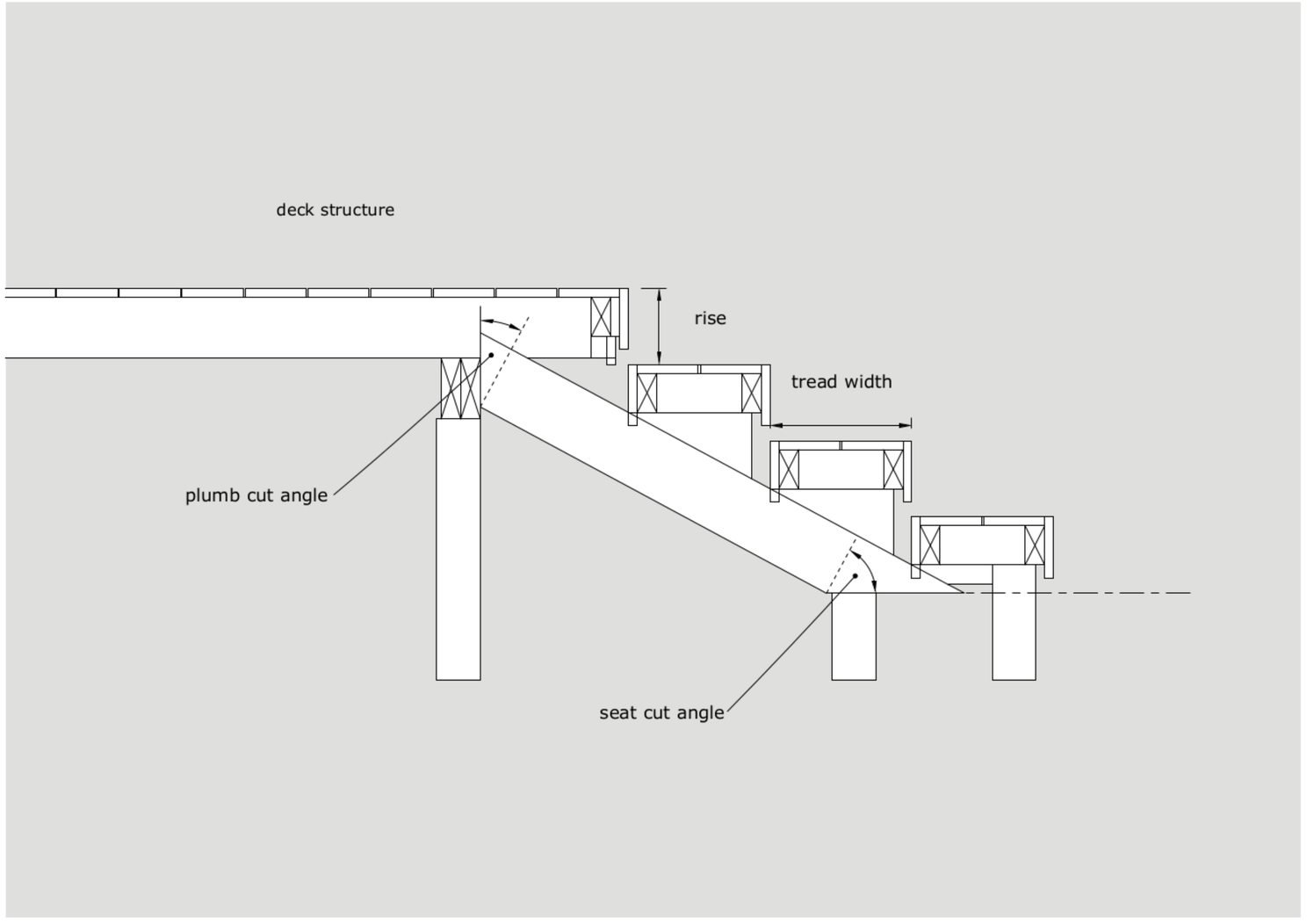

Plumb and Seat cut angles shown