BuildMath

Hip Roof

One worked example, with the maths behind each result - follow it in the app and check it by hand.

© Robert Butwell 2026

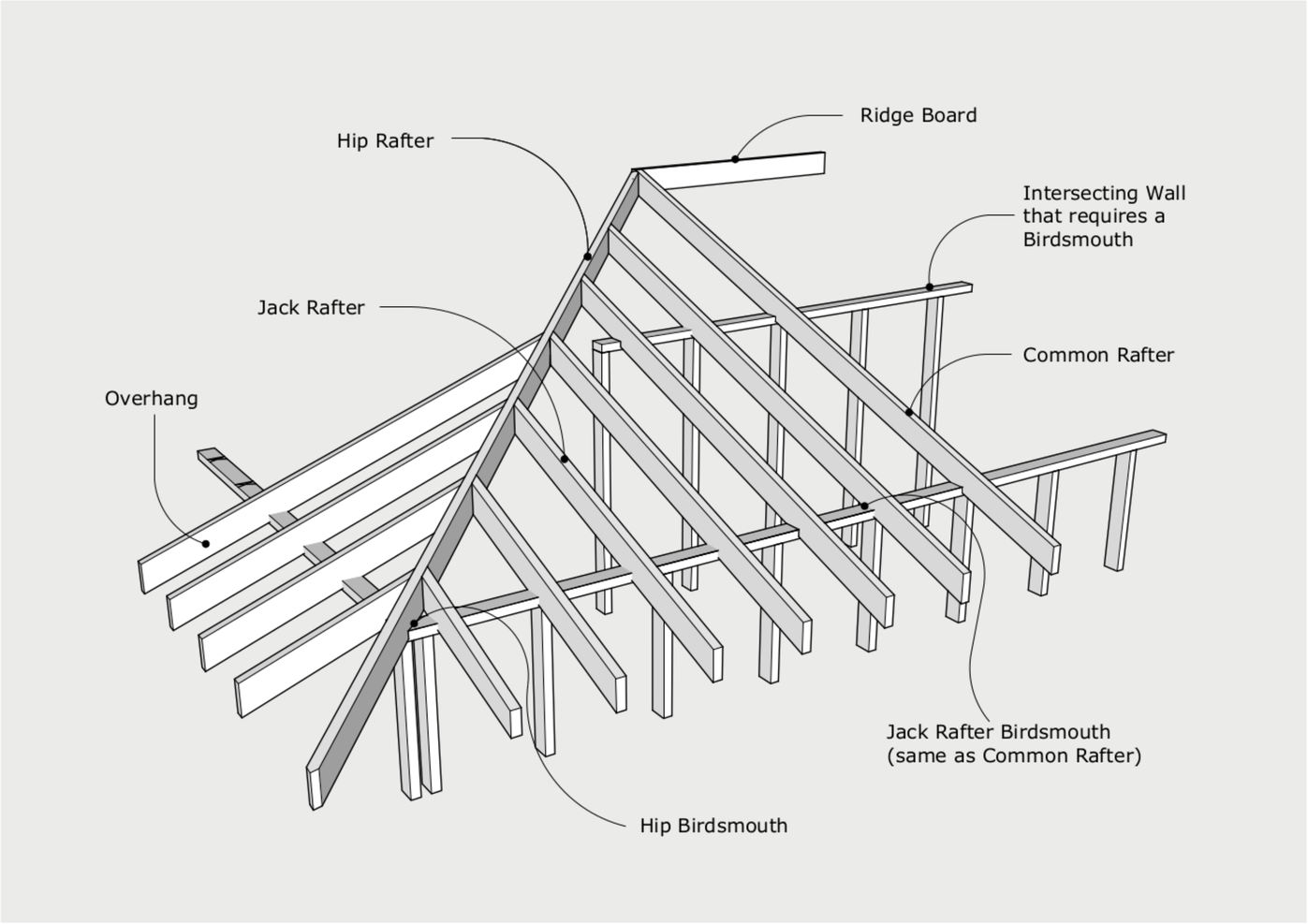

Hip Roof gives the lengths, cuts and marks for the common, hip, valley and jack rafters of a standard 45° hip, with the birdsmouths over the walls.

Common rafter =
(span – ridge deduction + overhang) ÷ cos(angle)

Hip in plan =
common run ÷ cos(45°)

tan(hip angle) = rise ÷ hip in plan

Hip rafter = hip in plan ÷ cos(hip angle)

Note:
For a single rafter over walls, like a lean-to, use Rafters.

Inputs

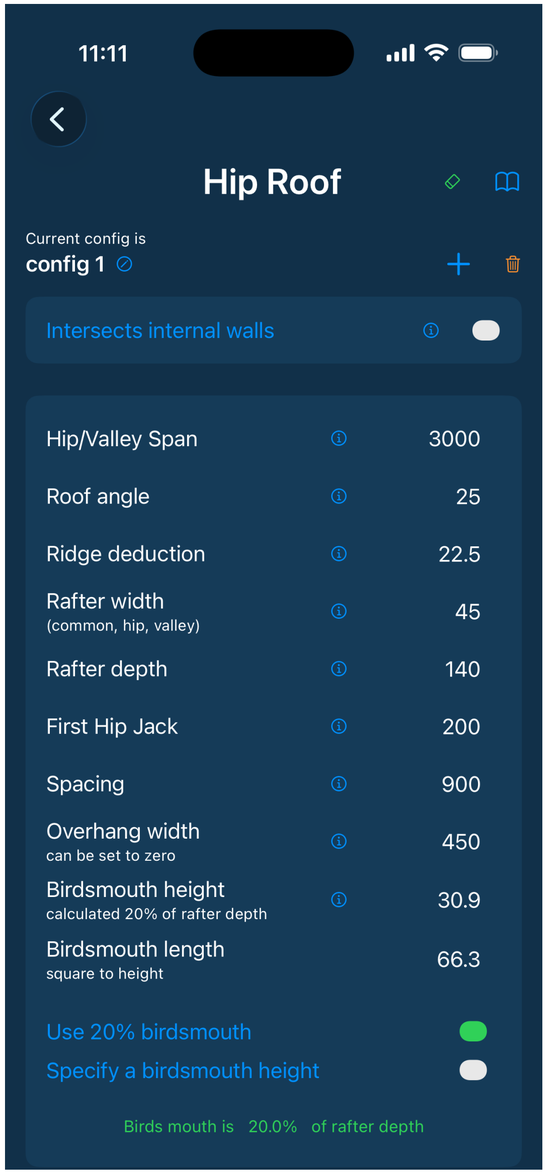

Enter the values

Hip/Valley Span	3000 - building line to the centre of the ridge.
Roof angle	25
Ridge deduction	22.5 - half the 45 ridge.
Rafter width	45 - common, hip and valley.
Rafter depth	140
First Hip Jack	200 - building line to the long point of the first jack.
Spacing	900 - jack spacing on the top plate.
Overhang width	450 - level, from the building line.

Birdsmouth

Use 20% birdsmouth - the usual maximum. Choose Specify a birdsmouth height for a smaller one.

Turn on Intersects internal walls to get the birdsmouths where the rafters cross walls inside the span.

Entering values and saving configs: see Build Math - the basics.

Common Rafter

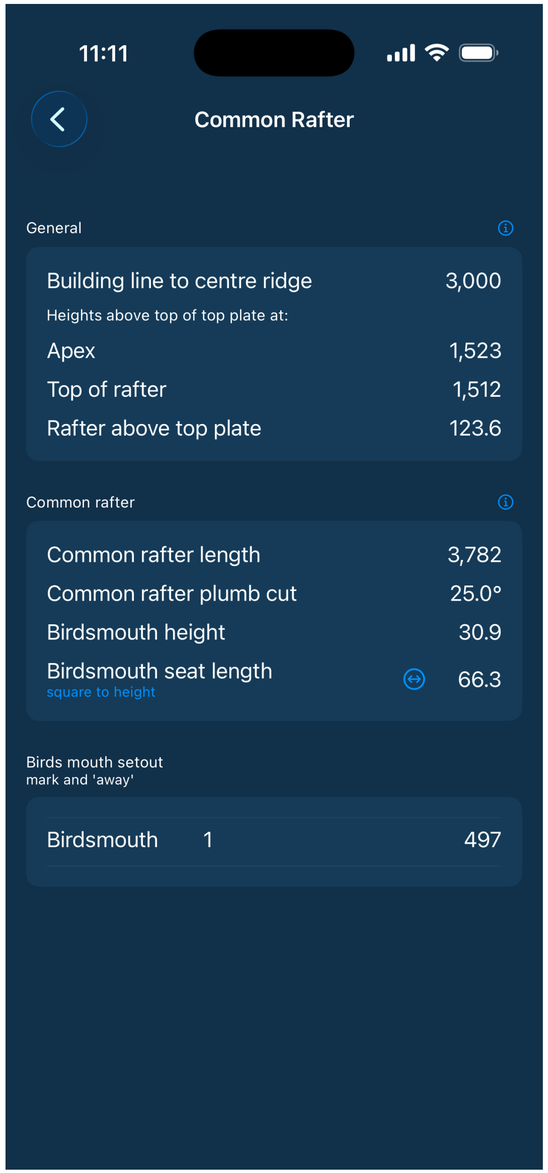

Birdsmouth

Birdsmouth height	140 × 20% ÷ cos(25°) = 28 ÷ 0.9063 = 30.9
Birdsmouth seat length	30.9 ÷ tan(25°) = 66.3
Rafter above top plate	140 ÷ cos(25°) – 30.9 = 154.5 – 30.9 = 123.6

Length

Common rafter length	(3000 – 22.5 + 450) ÷ cos(25°) = 3427.5 ÷ 0.9063 = 3782
Birdsmouth 1	450 ÷ cos(25°) = 497 - from the overhang end, mark and 'away'.

Heights above the top plate

Apex	3000 × tan(25°) + 123.6 = 1523
Top of rafter	(3000 – 22.5) × tan(25°) + 123.6 = 1512

Every roof plane sits at the same 123.6 above the plate, so the hip and valley line up with the commons.

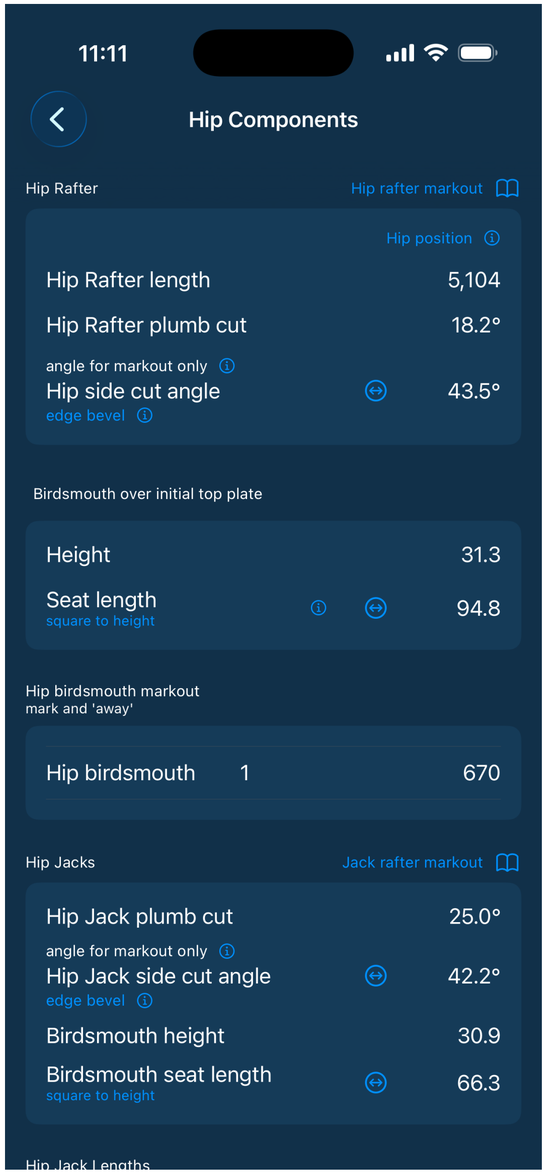

Hip Components

Length	3000 – 22.5 + 450 = 3427.5
Hip in plan	3427.5 ÷ cos(45°) = 4847.2
Rise	3427.5 × tan(25°) = 1598.3
Hip angle	$\tan^{-1}$(1598.3 ÷ 4847.2) = 18.25°
Hip Rafter length	4847.2 ÷ cos(18.25°) = 5104 - long point to long point.
Hip side cut angle	$\tan^{-1}$(cos(18.25°)) = 43.5° - edge bevel.
	Toggle for the square bevel, 90 – 43.5 = 46.5°.

Birdsmouth over initial top plate

The hip is flatter than the common, so it needs a little less out to keep the tops level.

Height	140 ÷ cos(18.25°) – 123.6 + 22.5 × tan(18.25°) = 147.41 – 123.58 + 7.42 = 31.25
Seat length	31.25 ÷ tan(18.25°) = 94.8

Hip birdsmouth 1 450 ÷ cos(45°) ÷ cos(18.25°) = 670 - along the centre line from the overhang end.

The next page shows the hip jacks.

Hip Jacks and Markouts

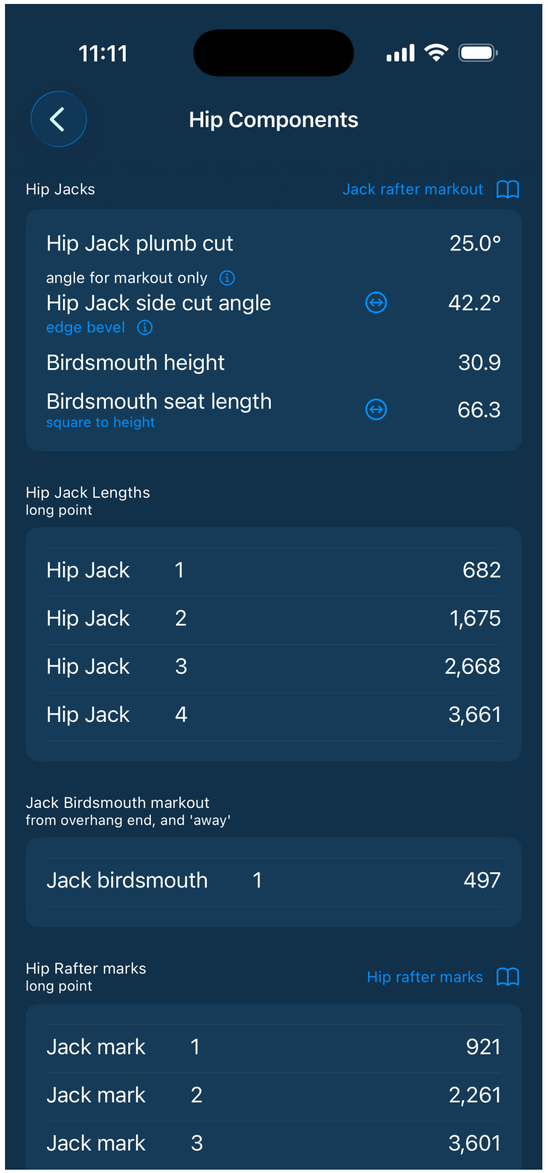

Hip Jack side cut angle	$\tan^{-1}(\cos(25°)) = 42.2°$ - edge bevel. Toggle for the square bevel, 47.8°.
Hip Jack plumb cut	25.0 - same as the common.
Hip Jack 1	$(200 + 450) \div \cos(25°) - 35.1 = 717.2 - 35.1 = 682$ - to the long point.
The 35.1 is half the hip width:	$22.5 \div \cos(45°) \div \cos(25°)$.
Each next jack	$+ 900 \div \cos(25°) = + 993 \rightarrow$ 1675, 2668, 3661
Top Plate marks	200, 1100, 2000, 2900 - First Hip Jack, then the Spacing.
Hip rafter marks	$(450 + 200 - 31.8) \div \cos(45°) \div \cos(18.25°) = 921$, then + 1340 each - the jacks along the hip, on the face, not the centre.

Hip jacks have the same plumb cut and birdsmouths as the commons.

Valley Components

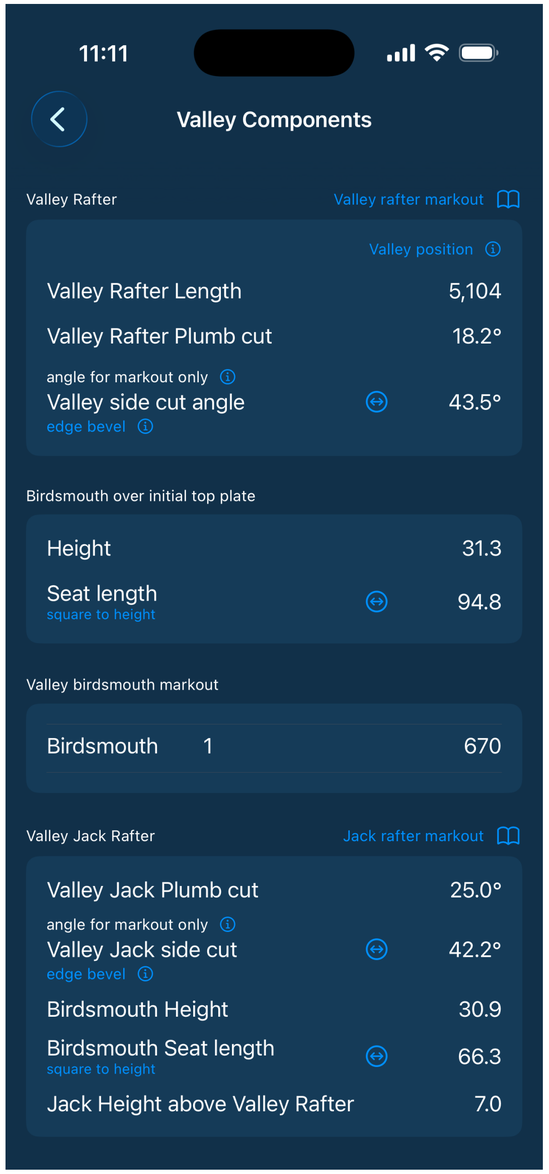

Valley Rafter

Same run, angle and length as the hip:	18.2° (18.25), 5104.
Valley side cut angle	43.5° - edge bevel (square bevel 46.5°)
V Rafter end	22.5 ÷ cos(18.25°) = 23.7 - add it to cut a V end.
Jack Height above Valley Rafter	7.0
Birdsmouth over initial top plate	Height 31.3, Seat length 94.8

Valley Jacks

Valley Jack 1	(3000 – 22.5 – 31.8) ÷ cos(25°) = 3250 - long point from the intersection of ridges.
Each next jack	– 993 → 2257, 1264, 271
Ridge marks	278, 1178, 2078, 2978 - from the intersection of ridges.

The drawings at the end show where the hip and valley sit at the plate and the ridge.

Read the list out loud: see Build Math - the basics.

Intersecting Walls

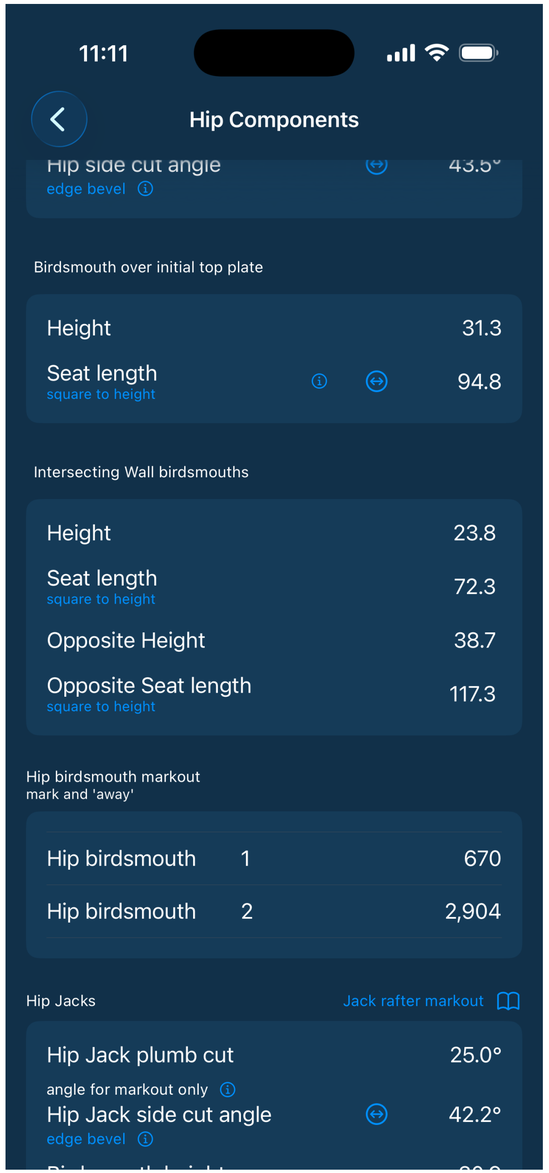

Turn on Intersects internal walls and add a wall

Wall position	1500 - building line to the front face of the internal wall.
Wall width	90

Common rafter and jacks

Birdsmouth 2	1500 ÷ cos(25°) + 497 = 1655 + 497 = 2152
Intersecting Wall height	1500 × tan(25°) = 699 - above the initial top plate.

Hip rafter

Hip birdsmouth 2	670 + 1500 ÷ cos(45°) ÷ cos(18.25°) = 670 + 2234 = 2904 - along the centre line.	
The hip crosses the wall at 45°, so each face of the birdsmouth is different:		
Height	140 ÷ cos(18.25°) – 123.58 = 23.8	Seat length 72.3
Opposite Height	23.84 + 45 × tan(18.25°) = 38.7	Seat length 117.3

Valley rafter

Birdsmouth 2	2904 - the same as the hip.
Height	31.3, Seat length 94.8
Opposite Height	16.4, Seat length 49.8

Valley jacks

Jack birdsmouth (3000 – 22.5 – 1500) ÷ cos(25°) = 1630 - from the top, mark and 'back'.

The pages after this have more drawings of each part, in the same order as the app screens.

Intersecting Wall birdsmouths

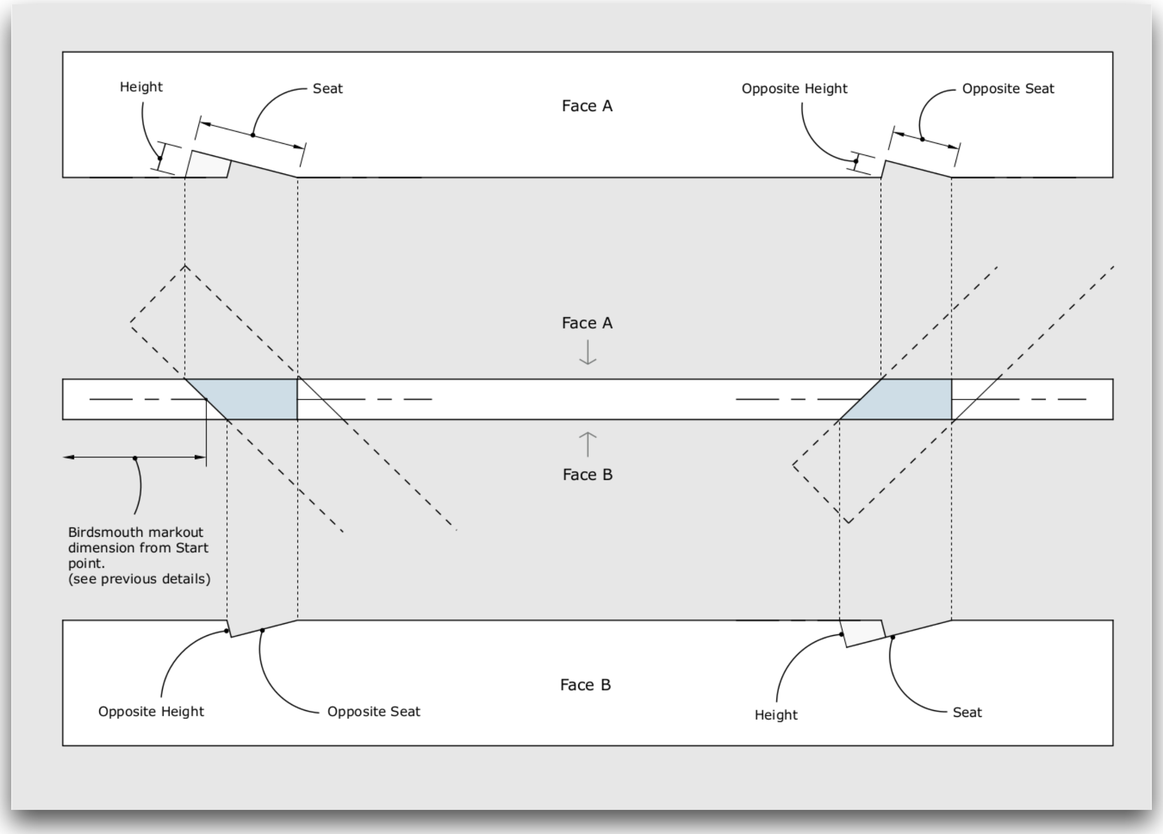

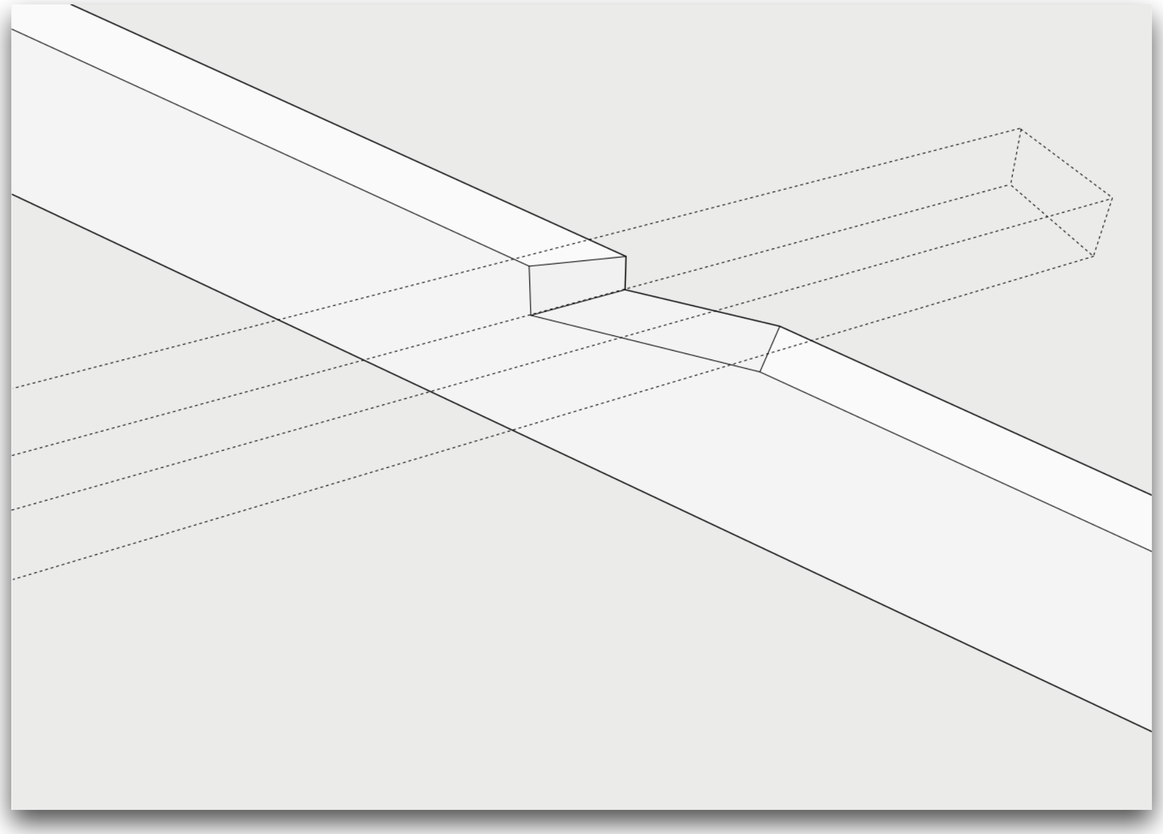

Intersecting wall birdsmouths have different dimensions on either side of the Hip rafter.

Because the Hip rafter is changing height and at 45° to the internal walls, the birdsmouth is quite a complicated housing. The diagram describes the relationship of the birdsmouth sizes on either face of the rafter.

Underside of hip crossing over an intersecting wall showing the angled cut at the back and the square cut as the Hip rafter rises above the wall plate.

Position of Hip Rafter

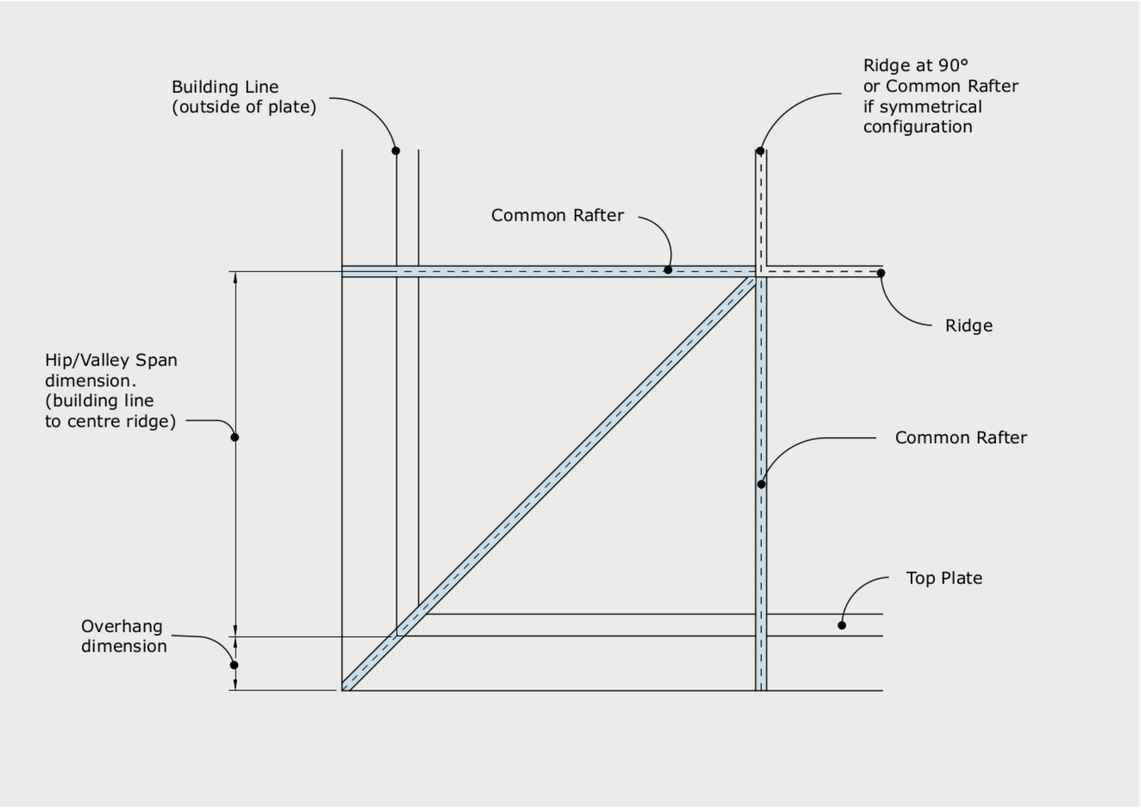

Note that the centre line of the first Common Rafter is the same dimension as building line to centre of ridge. All centre lines converge on a point on the centre of ridge and half a rafter width in from the end.
This is necessary so that all the centre lines and planes converge.

Be careful to set the corner up this way. It would be an easy mistake to place the Common rafter to the side of the mark.

Position of Hip Rafter at Top

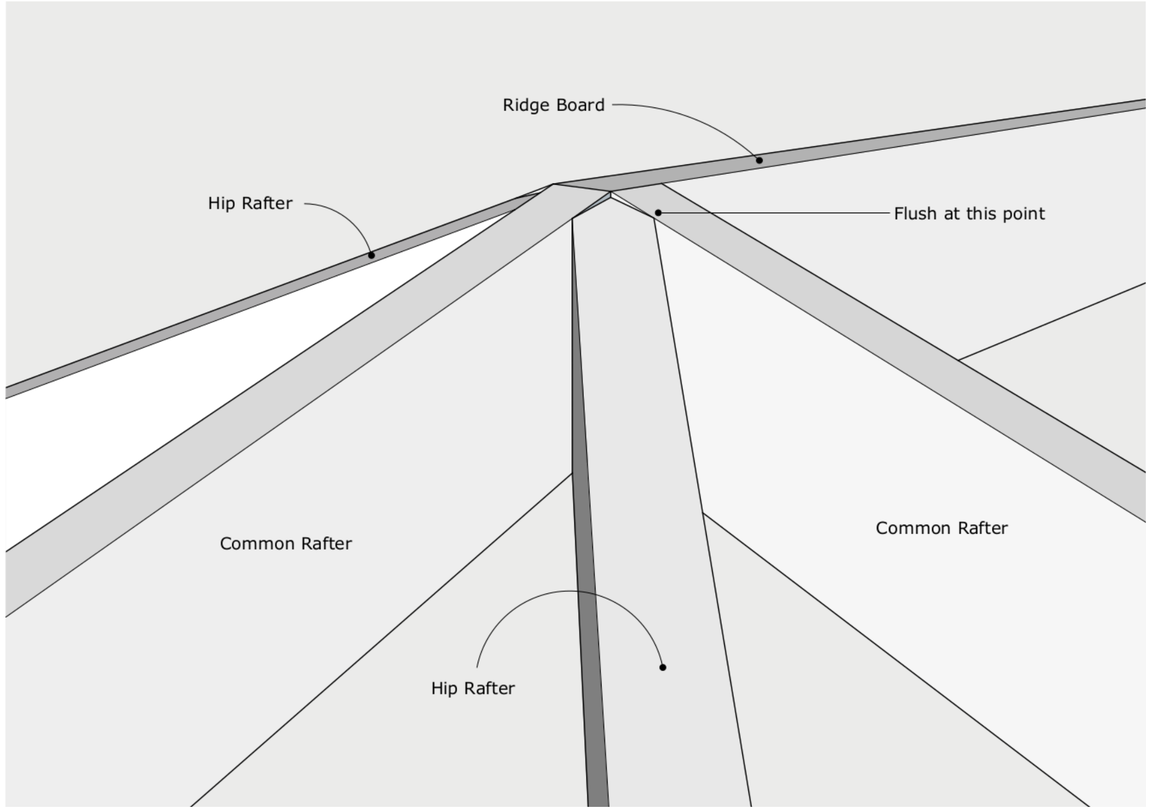

Position of the Hip Rafter at the ridge junction is as shown.

The edges of the Hip are flush with top of the Common rafters

Building Line to centre of Ridge

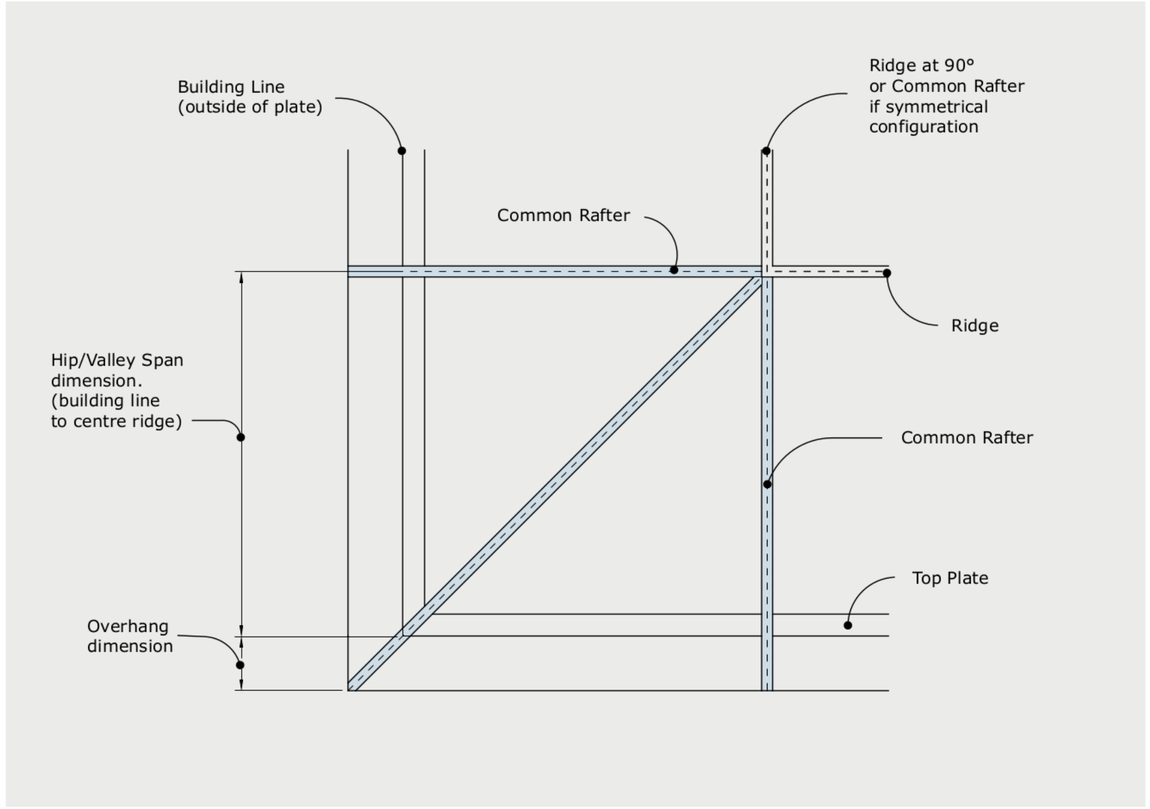

Note that the centre line of the first Common Rafter is the same dimension as building line to centre of ridge. All centre lines converge on a point on the centre of ridge and half a rafter width in from the end.
This is necessary so that all the centre lines and planes converge.

Be careful to set the corner up this way. It would be an easy mistake to place the Common rafter to the side of the mark.

First Hip Jack and Spacing

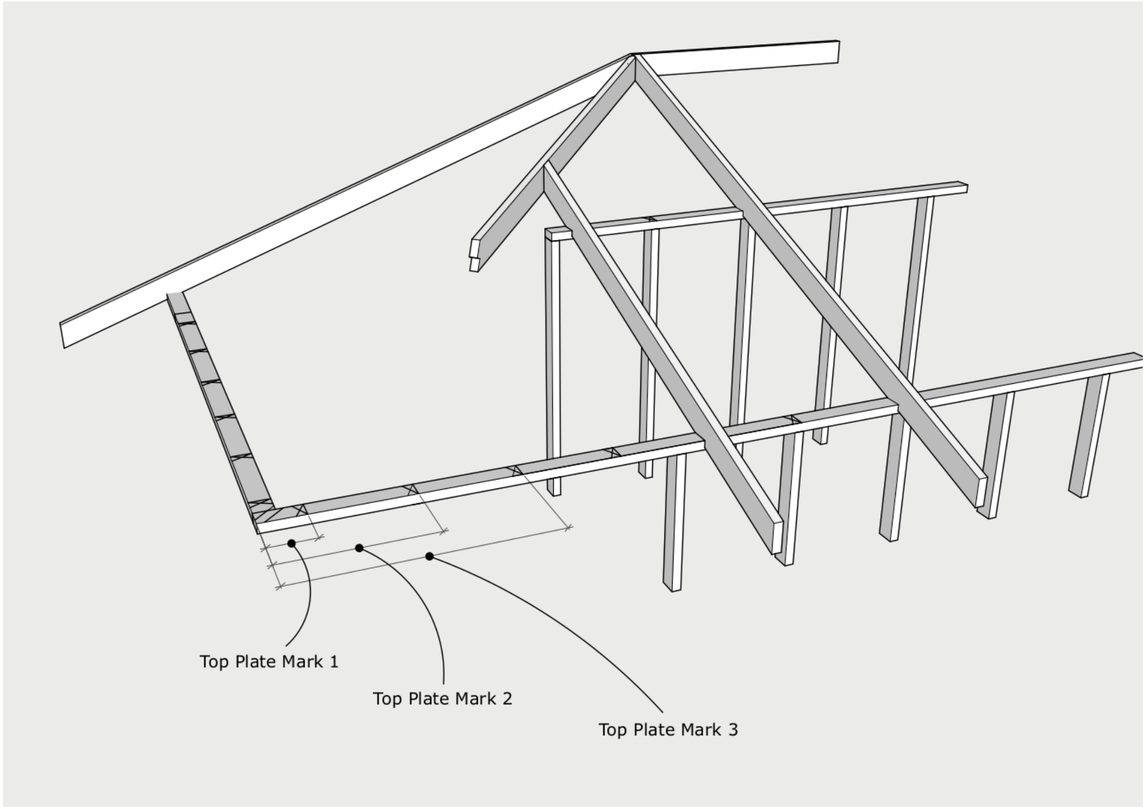

Placing the first hip Jack is an engineering trade off.
Further from the corner gives it more cantilever to the overhang, while closer to the corner, closes up the span of the fascia from the extension of the hip rafter and the first Jack.

A default of 200mm is set as a starting point. Note that the mark is on the far side of the Jack rafter so that the alignment is on the long point of the side cut on the Hip.

Valley Position at Bottom

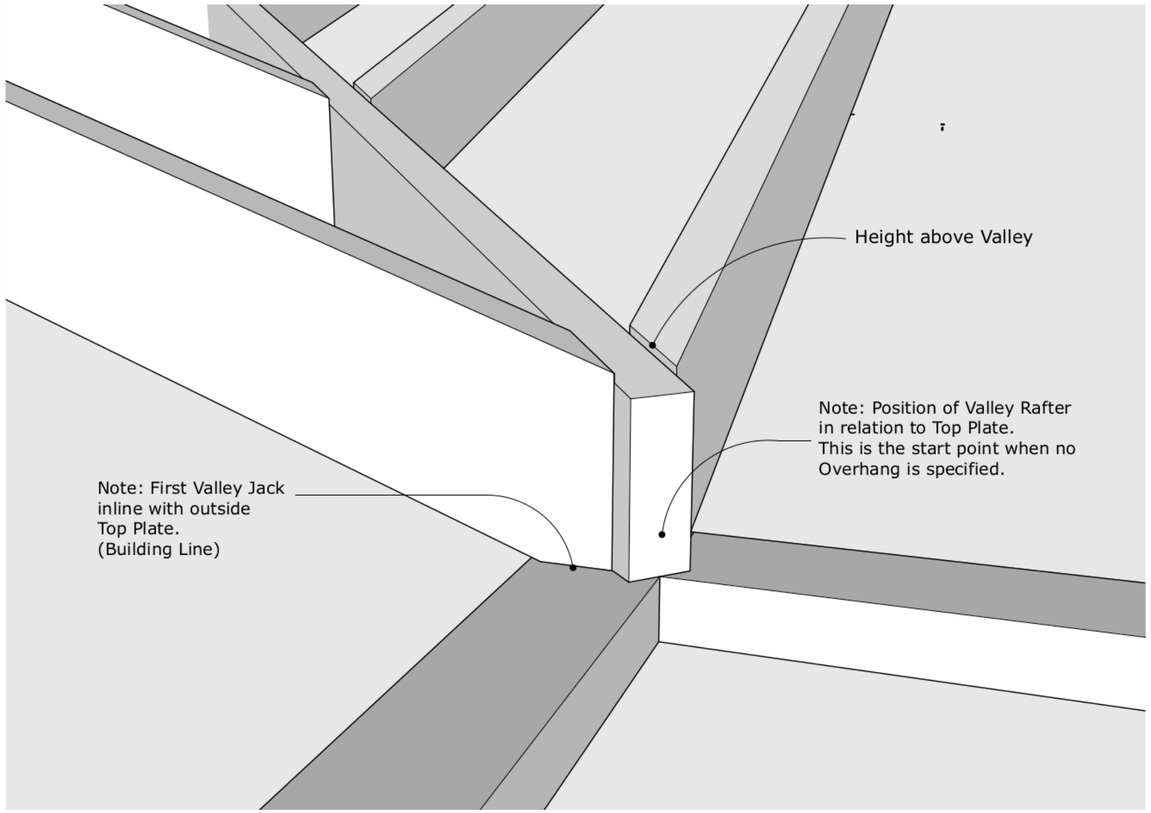

Valley Position at Top

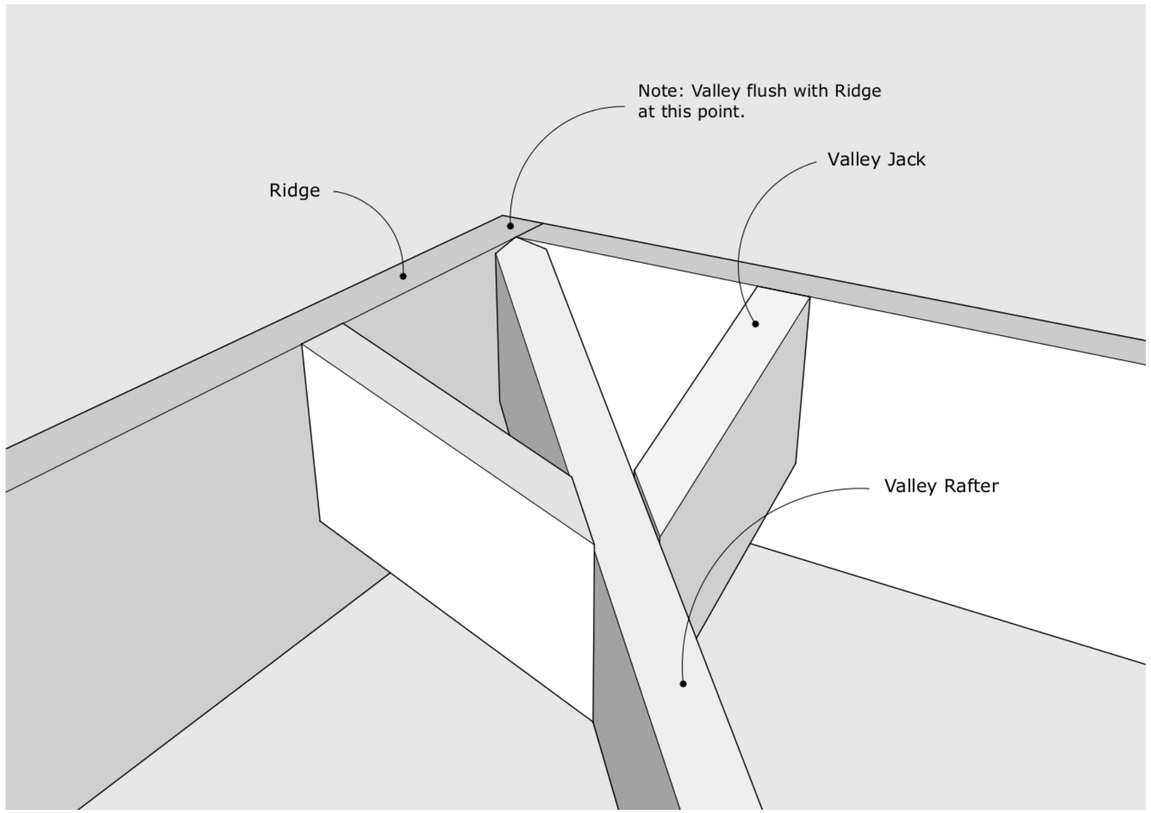

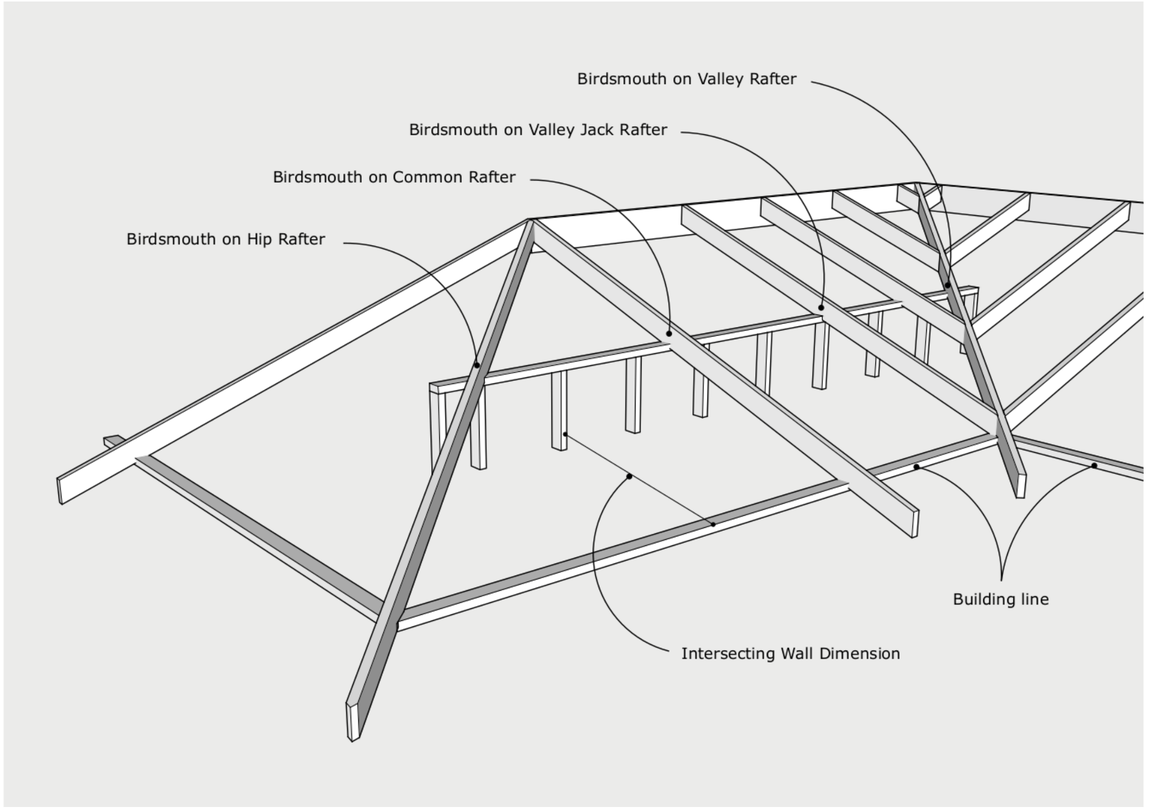

birdsmouths and intersecting wall dimension

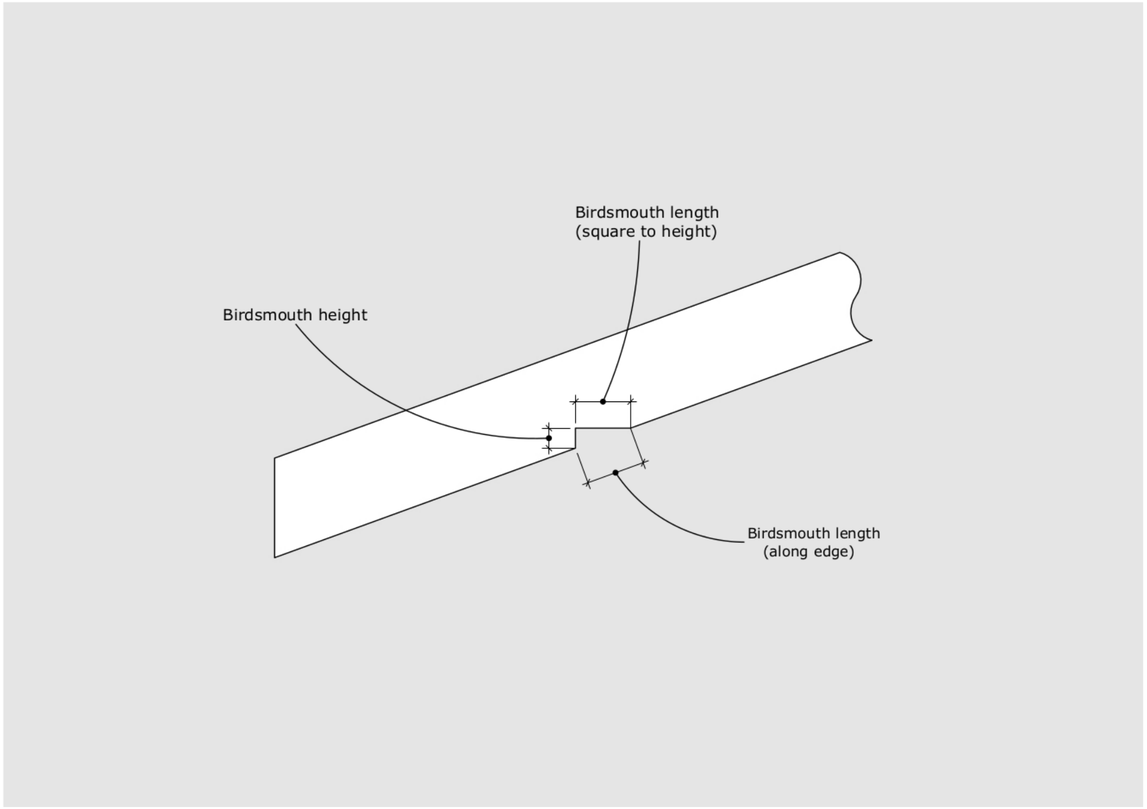

Common or Jack rafter birdsmouth

Intersecting Wall birdsmouths

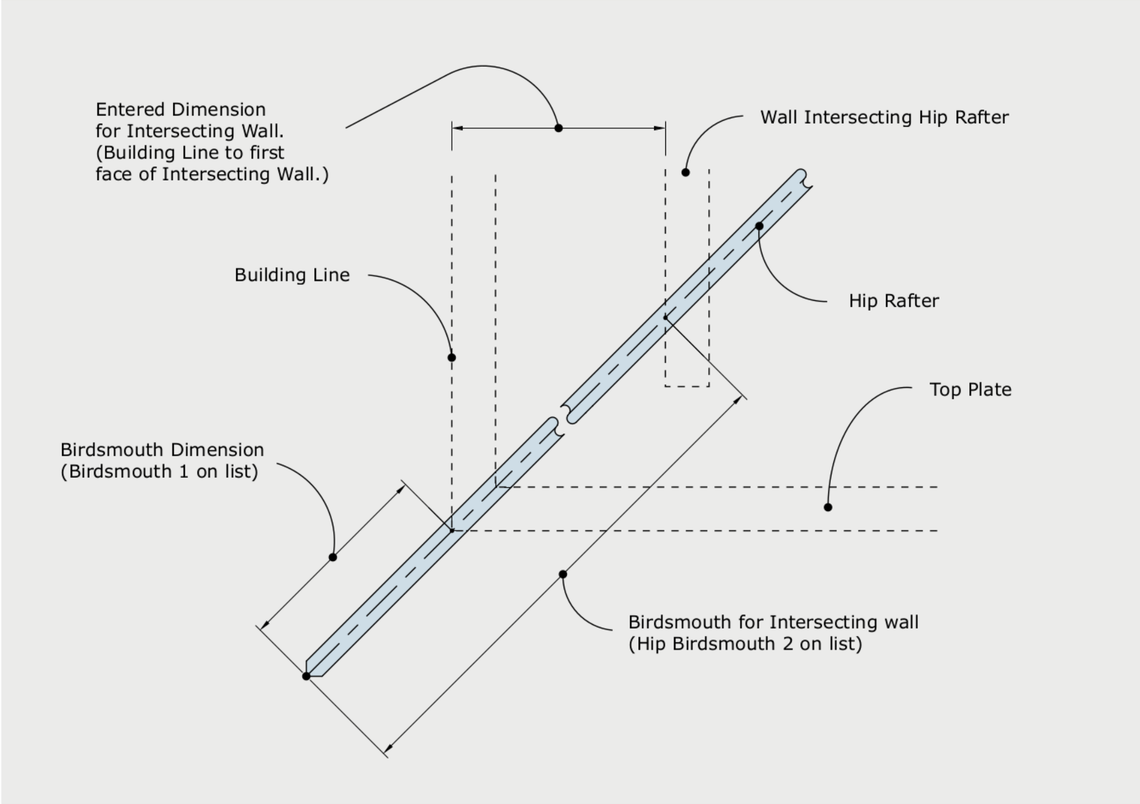

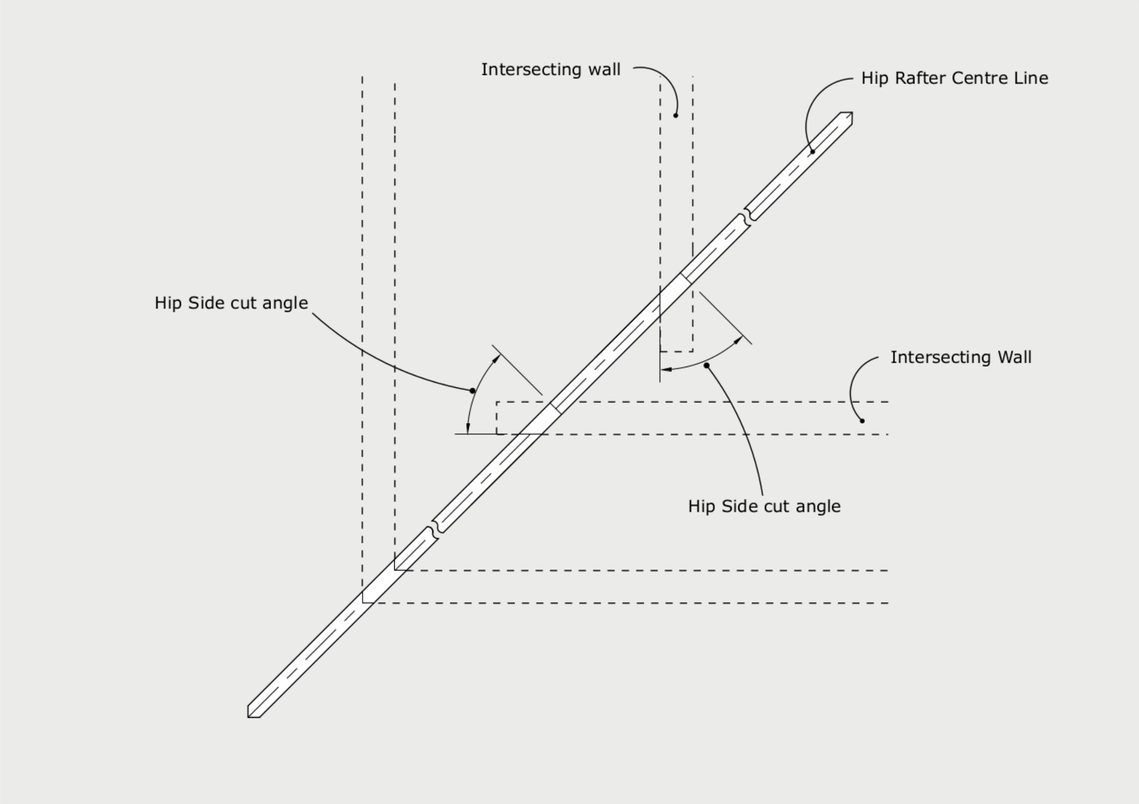

Measurements on the Hip rafter are made along the centre line of the rafter as shown

Toggle between Square to height and Along the edge dimensions with the ⇔

The angled end of the birdsmouth sits against the face of the wall. The front of the birdsmouth produces a square cut across the rafter as it rises above the wall height.

Common Rafter length

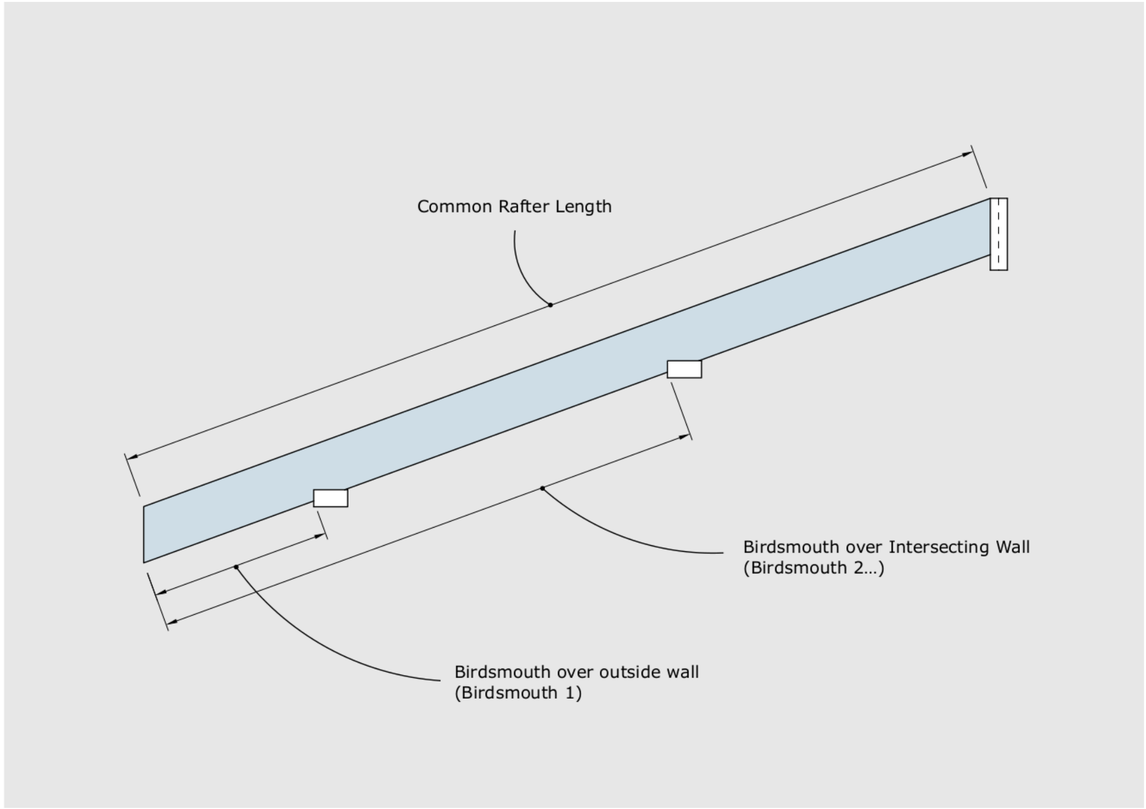

Birdsmouth positions are marked from the bottom end of the rafter to the point where the plumb cut of the birdsmouth is.

Birdsmouth lengths

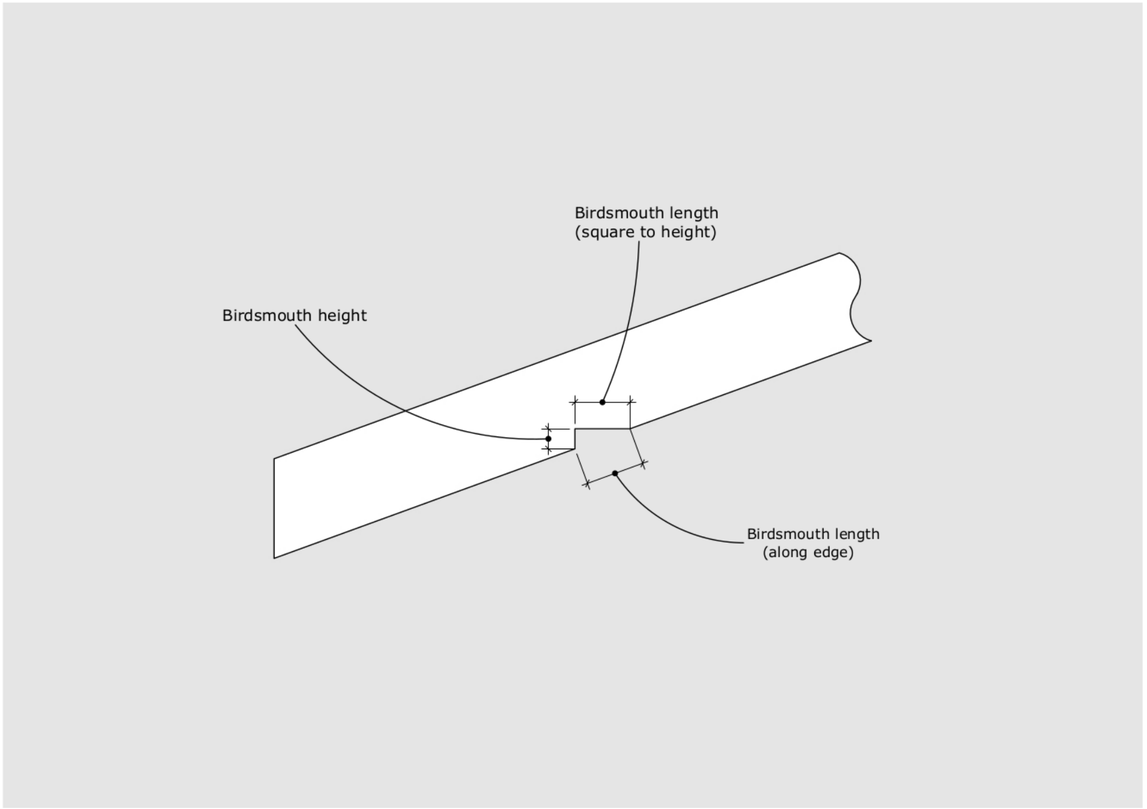

Toggle between Square to height and Along the edge dimensions with the

Hip Rafter length

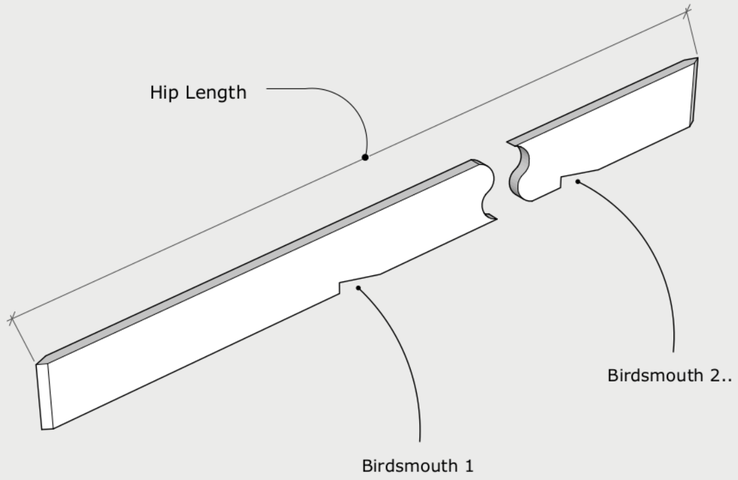

Measured along the top or bottom from long point to long point.

Hip Rafter plumb and side cuts

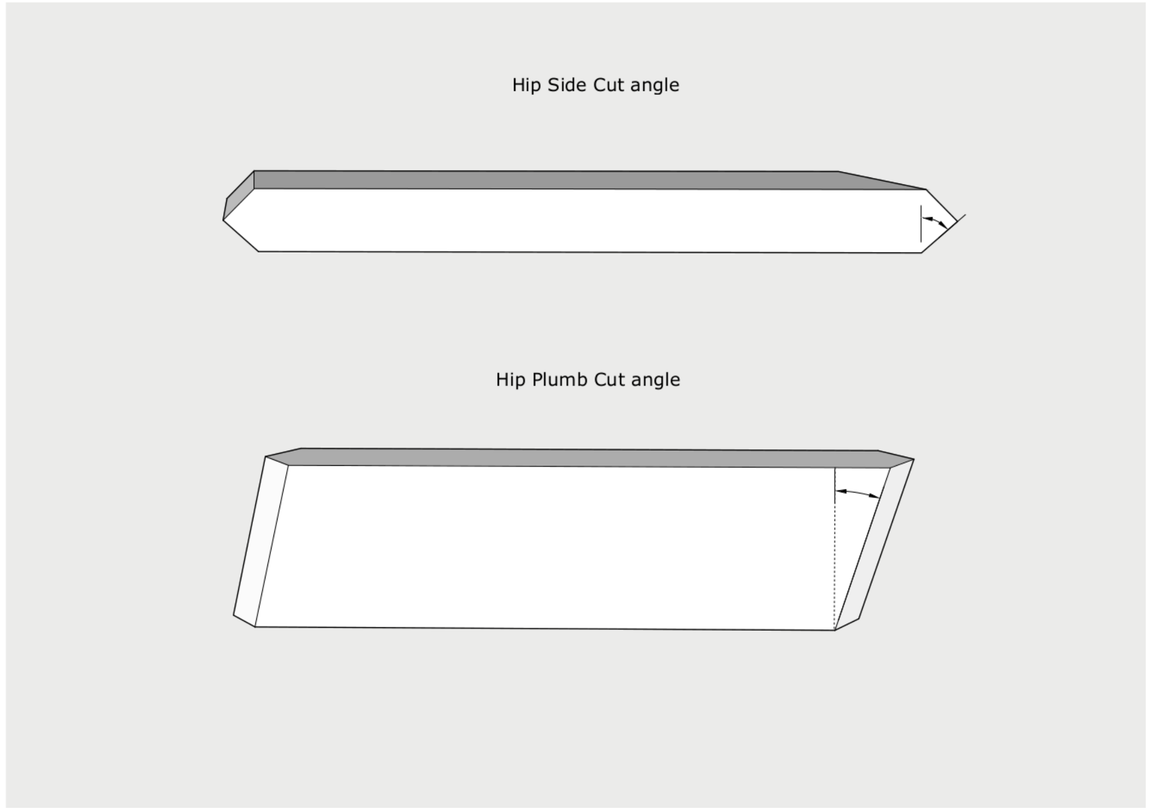

If you are manually marking out the side cut, use the Hip Rafter sidecut angle measured as shown in the diagram.

On a compound mitre saw, set the bevel to 45° and the table to the Plumb cut will produce the side cut correctly.

Hip Jacks

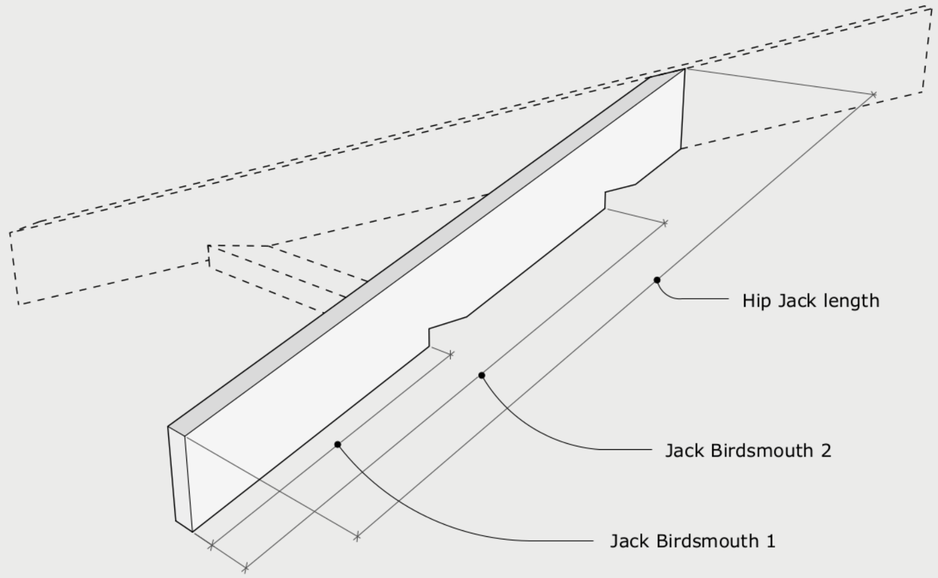

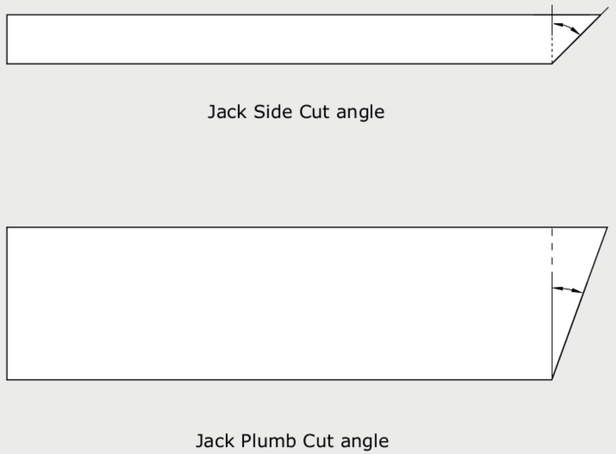

The Hip Jack length is measured to the long point of the side cut as shown.

Birdsmouths are running measurements from the point shown. Birdsmouth 1 is the birdsmouth over the outside wall. If there is no overhang the position will be 0. (the end of the rafter)

Tip: If there is no overhang, mark the rafter out before cutting the first birdsmouth, which will remove the point to measure from.

Hip Jacks have the same birdsmouths and plumb cuts as Common rafters.

If you are manually marking out the side cut, use the Hip Jack Rafter sidecut angle measured as shown in the diagram.

On a compound mitre saw, set the bevel to 45° and the table to the Plumb cut will produce the side cut correctly.

Hip Jack Marks

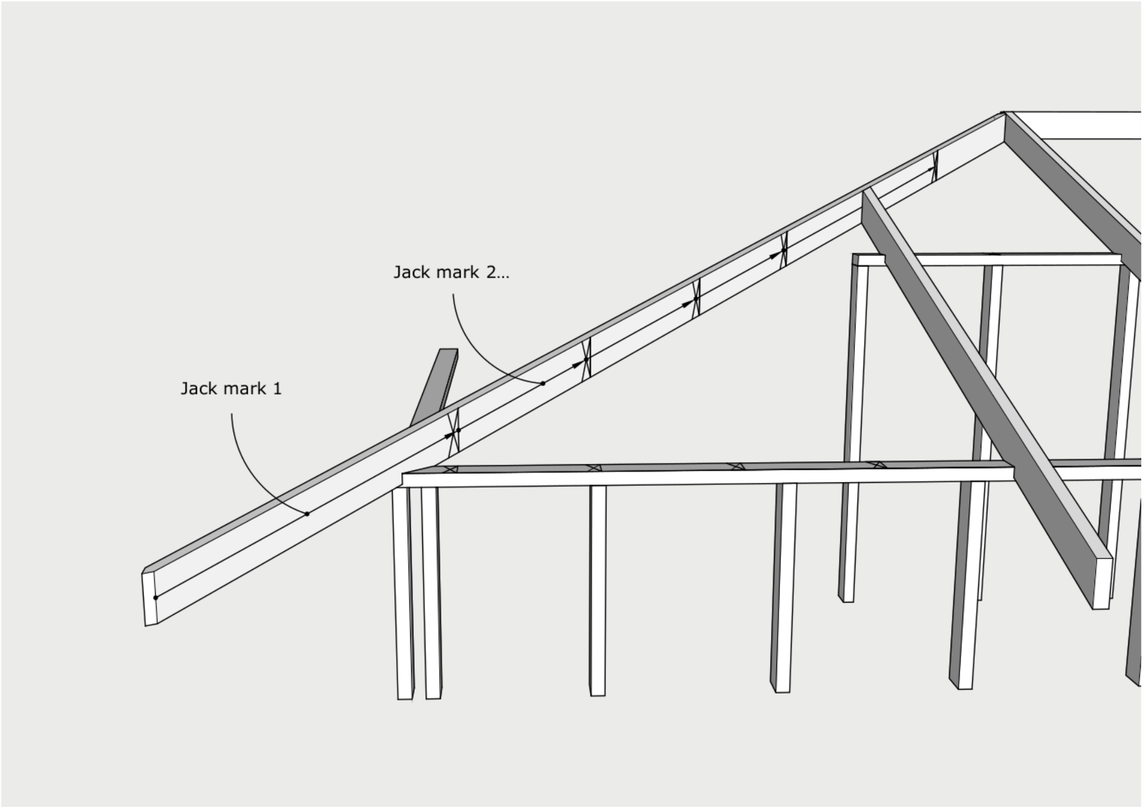

Mark the Jacks along the Hip rafter face, starting on the short point of the side cut as shown.

The measurements from the table are the long point of the Jack side cut.
The first position is the measurement you set as the **First Hip Jack** at configuration, plus any specified overhang.

Hip Jack Plate Marks

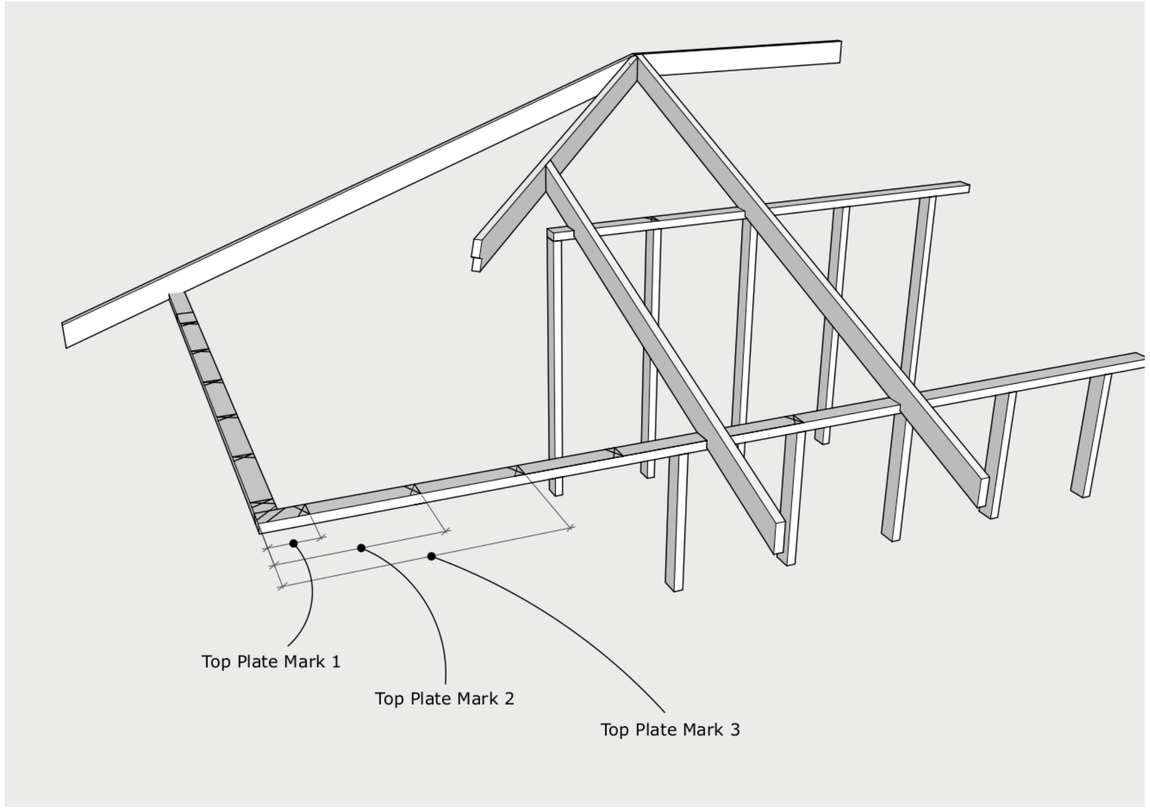

The Top Plate marks table gives the Hip Jack long point positions on the top plate.
The first mark is the **First Hip Jack** distance you set at configuration.
Subsequent marks are based on the **Spacing** you specified.

Valley Jacks

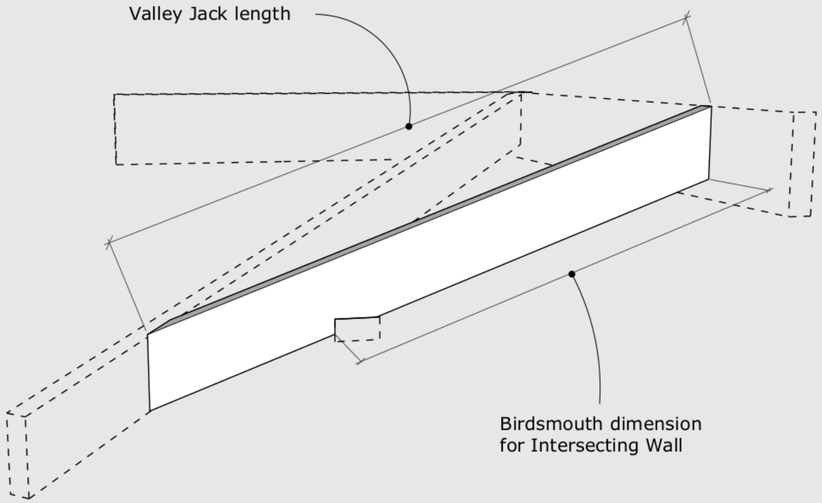

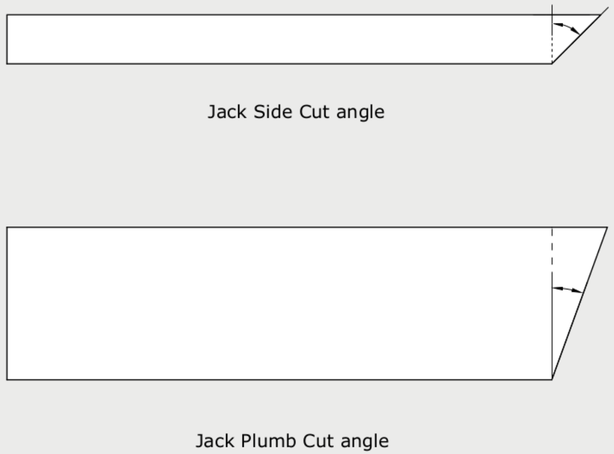

The Valley Jack length is measured to the long point of the side cut, from the intersection of ridges.
Birdsmouths only where a jack crosses an internal wall - measured from the top, mark and 'back'.

Valley Jacks have the same birdsmouths and plumb cuts as Common rafters.

If you are manually marking out the side cut, use the Valley Jack Rafter sidecut angle measured as shown in the diagram.

On a compound mitre saw, set the bevel to 45° and the table to the Plumb cut will produce the side cut correctly.

Valley Jack Marks

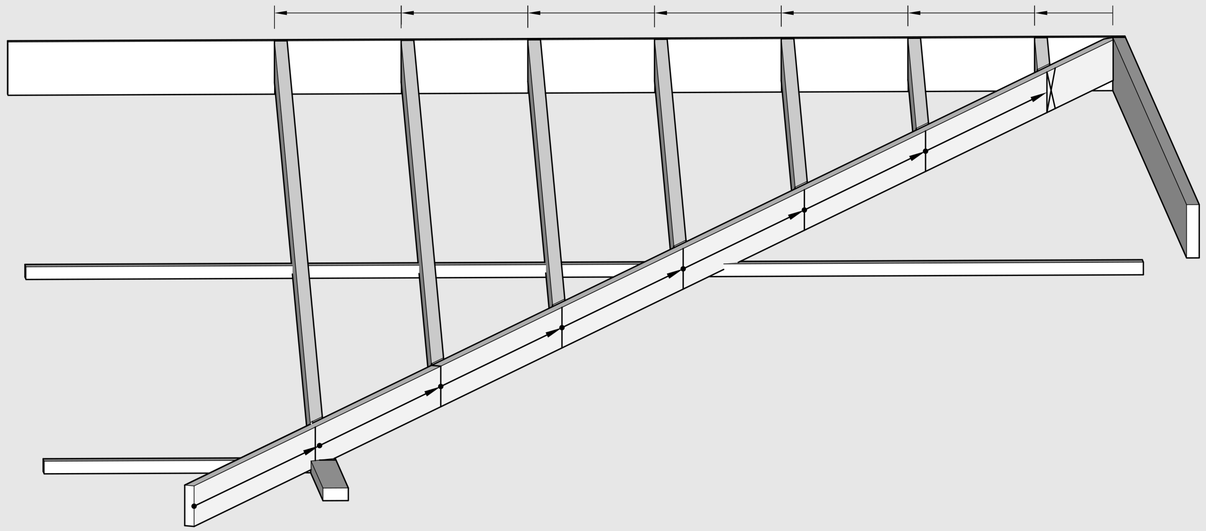

Mark the jacks along the valley rafter face, from the bottom end.
The first mark is the first jack at the building line - the overhang along the valley plus half the valley width. The rest follow the Spacing.
The Ridge marks start at the intersection of the ridges.